RSLO



COURSE OF TECHNICAL INSTRUCTION

LONG LINE EQUIPMENT

PUBLISHED BY
THE POSTMASTER-GENERAL'S DEPARTMENT

S/25 — 1900
21-6-48

COMMONWEALTH OF AUSTRALIA

CHIEF ENGINEER'S BRANCH,
POSTMASTER-GENERAL'S DEPT.,
TREASURY GARDENS,
MELBOURNE. C.2.

COURSE OF TECHNICAL INSTRUCTION

CONTENTS

LONG LINE EQUIPMENT.

(Index at back of book.)

PAPER NO. 1.
1. Introduction.
2. Thermionic Emission.
3. Two Electrode Valves (Diodes).
4. Three Electrode Valves (Triodes).
5. Four Electrode Valves (Tetrodes or Screen Grids).
6. Five Electrode Valves (Pentodes).
7. Indirectly Heated Thermionic Valves.
8. Grid Bias.
9. Relationship between Valve Elements.
10. Types of Thermionic Valves Used in Telephone Plant.
11. Ballast Lamps.

PAPER NO. 2.
1. Thermionic Valve Amplifiers.
2. Thermionic Valve Oscillators.
3. Thermionic Valve Rectifiers.
4. Thermionic Valve Modulators.
5. Thermionic Valve Demodulators.
6. The Selection of a Thermionic Valve.
7. The Output Impedance of a Thermionic Valve.

PAPER NO. 3.
1. Description of Metal Rectifiers.
2. Metal Rectifier Converters.
3. The Efficiency of Metal Rectifier Converters.
4. The Regulation of Metal Rectifier Converters.

PAPER NO. 3 (Contd.)
5. The Voltage Doubler Circuit.
6. Metal Rectifier Modulators and Demodulators.
7. Metal Rectifier Variable Attenuator, Static Modulator or Relay.
8. Miscellaneous Application of Metal Rectifiers.

PAPER NO. 4.
1. Wave Filters - General.
2. General Theory of Filters.
3. Examples of Filters.
4. Crystal Filter.

PAPER NO. 5.
1. Voice Frequency Repeaters.
2. The 21 Repeater.
3. The 22 Repeater.
4. Cord Circuit Repeaters.
5. Four Wire Repeaters.
6. Pentode Repeaters.
7. Balance Networks.
8. Gain Control.
9. Signalling Facilities.
10. Troubles in Thermionic Valves.
11. Maintenance of Repeaters.

PAPER NO. 6.
1. Voice Frequency Signalling System.
2. 1000 Cycle Current Supply.
3. Testing.
4. Signalling Systems in Use.

/ PAPER NO. 7.

CONTENTS.

LONG LINE EQUIPMENT.

PAPER NO. 7.

1. Carrier Systems - Reasons for Development.
2. Fundamentals of Carrier Transmission.
3. Requirements for Practical Use.
4. Transmission Requirements of Different Carrier Systems.
5. Methods of Modulation and Demodulation.
6. Voltage Limiters.
7. Generation of Carrier Frequencies.
8. Amplifiers.
9. Line Considerations and Equalisation.
10. Pilot Equipment and Signalling on Carrier Systems.
11. Repeaters.
12. Types of Systems in Use.

PAPER NO. 8.

1. The Type C.F.1 System.
2. The Type D and DA Systems - General.
3. Operation of the D and DA Systems.
4. The F and FA Systems - General.
5. Operation of the F and FA Systems.
6. The Ringing Circuit, Testing Facilities and Alarms.
7. The Voltage Regulator.
8. Repeaters.
9. The SA and SB Type Systems - General.
10. Operation of the SA and SB Systems.
11. Signalling.
12. Testing Facilities.
13. The SOA and SOB Type Systems - General.
14. Operation of the SOA and SOB Systems.
15. The Ringing Circuit and Testing Facilities.

PAPER NO. 9.

1. Three Channel Carrier Systems - Type B.
2. Signalling on the Type B System.
3. The Type C Three Channel System.
4. The Type T System.
5. Description of Operation of the Type T.
6. Testing Equipment for the Type T.
7. Voltage Regulation.

PAPER NO. 10.

1. Programme Transmission.
2. Frequency Band to be Transmitted.
3. Frequency Response.
4. Non-Linear Distortion.
5. Noise.
6. Line Amplifiers.
7. Programme Branching.
8. Equalisers.
9. Supervisory Equipment.
10. Power Supply.

PAPER NO. 11.

1. Carrier System for Programme Transmission.
2. General Description of System.
3. Synchronism.
4. The Unwanted Sideband.
5. Transmitting Terminal.
6. Receiving Terminal.
7. Repeaters.
8. Demodulating Repeater.

PAPER NO. 12.

1. Introduction.
2. Type J Carrier System (Aerial Wires).
3. Type K Carrier System (Cable Wires).
4. Sydney-Maitland Cable Carrier System.

PAPER NO. 13.

1. Introduction.
2. Type B Carrier Telegraph System.
3. Voice Frequency Telegraph System.
4. Comparison of Type B and V.F. Systems.
5. Type R Carrier Telegraph System.
6. Send and Receive Carrier Loops.
7. Static Modulator.
8. Telegraph Distortion Measuring Equipment.

COMMONWEALTH OF AUSTRALIA.

Chief Engineer's Branch,
Postmaster-General's Department,
Treasury Gardens,
Melbourne. C.2.

COURSE OF TECHNICAL INSTRUCTION.

LONG LINE EQUIPMENT.

CONTENTS:

THERMIONIC VALVES.

1. INTRODUCTION.

2. THERMIONIC EMISSION.

3. TWO ELECTRODE VALVES (DIODES).

4. THREE ELECTRODE VALVES (TRIODES).

5. FOUR ELECTRODE VALVES (TETRODES OR SCREEN GRIDS).

6. FIVE ELECTRODE VALVES (PENTODES).

7. INDIRECTLY HEATED THERMIONIC VALVES.

8. GRID BIAS.

9. RELATIONSHIP BETWEEN VALVE ELEMENTS.

10. TYPES OF THERMIONIC VALVES USED IN TELEPHONE PLANT.

11. BALLAST LAMPS.

12. TEST QUESTIONS.

---

1. INTRODUCTION.

1.1 This subject of Long Line Equipment will deal with the theory and practice of providing telephone and telegraph transmission and signalling over lines, generally trunk lines, of considerable length, and also the methods of increasing the efficiency of line plant by sending, simultaneously, a number of messages over the lines. The first papers will be devoted to a description of the important circuit components, viz. the thermionic valves, metal rectifiers, filters etc. used to achieve these results.

/ 1.2

1.2 The terms used in any technical description should allow of no misunderstanding. In rapidly advancing industries terms are adopted without reference to those used elsewhere. Thus many items in telecommunication are known by several different terms. The British Standards Institute has published in their specification No. 205 of 1936, a Glossary of terms for Telecommunication items. It is proposed to use these standard English terms in these papers and, to prevent confusion, the following list gives first, the standard term to be used in these papers, followed by other names for the same article.

B.S.I. Term Used Here	Other Names
Thermionic Valve	Electron Tube, Thermionic Tube, Ionic Valve Vacuum Tube, Valve.
Anode Battery	Plate Battery, High Tension or H.T. Battery, "B" Battery
Filament Battery	"A" Battery, Cathode Battery, Low Tension or L.T. Battery.
Grid Bias	Grid Priming, "C" Battery.
Mutual A.C. Conductance	Trans-conductance, Slope.
Anode A.C. Resistance	Plate A.C. Resistance, Anode Impedance, Output Impedance.

2. THERMIONIC EMISSION.

2.1 The thermionic valve has become so generally known in connection with radio receiving sets and numerous similar devices that it probably needs no introduction. However, its applications in long distance telephone and telegraph work are so general that it is highly important that the theory of its operation be thoroughly understood.

In one sense the action of the thermionic valve seems to contradict the more elementary understanding of circuits, in that current actually flows through an open space without the accompanying arc usually associated with a current flowing across an apparent open circuit. In the usual valve the current flow that takes place is from one electrode to another through a vacuum, and the conditions are such as to permit this flow without the application of extremely high potentials.

/ 2.2

2.2 Any fundamental conception of the valve's action is based on the electron theory. According to this theory, the electron is the smallest possible charge of electricity, just as an atom is the smallest possible chemical particle of any substance. Electrons are all identical and each has a definite negative charge and a definite mass. All substances are made up of electrons and corresponding positive particles called protons. Much less is known about protons than about electrons; it has been determined, however, that they are of approximately the same size as electrons but nearly two thousand times as heavy. The most widely accepted theory of the structure of the atom postulates that it is made up of a nucleus consisting of one or more protons surrounded by an equal number of electrons, the number and arrangement of the positive and negative charges being different for each chemical element. The simplest and lightest element, hydrogen, is made up of a nucleus consisting of a single proton around which a single electron revolves in certain fixed orbits. Heavier elements have nuclei consisting of a number of protons held together and partially neutralized by about half as many electrons, and the remaining half of the electrons of the atom revolve about the nucleus in various orbits. In every case, the number of electrons revolving in orbits about the nucleus gives the atomic number of the element, and the number of protons contained in the nucleus gives the atomic weight. The electron has the properties of a wave as well as of a corpuscle, and it is, therefore, not entirely accurate to think of it as being located at a point in space. Nevertheless, some idea of its status as a part of the atom-model that has been considered may be obtained if it is noted that its magnitude and space relationships, relative to the atom as a whole, are comparable to those of the earth in relation to the solar system. Meanwhile, it must be remembered that the atom itself is almost inconceivably minute.

Electrons are attracted toward the atom nucleus and are repelled by one another with tremendous forces relative to their magnitude - forces infinitely greater than gravitational forces. For this reason, the electrons in the atoms are for the most part held permanently in place in fixed orbits around the atom nucleus, but, in the atoms of many materials, one or more of the electrons farthest out from the nucleus is attached rather loosely and may by various means be drawn away from the atom altogether. When this happens to a number of the atoms making up a substance, as for instance a piece of metal, the substance contains less than its normal quota of electrons and is said to be positively charged. At the same time, something else must be negatively charged or contain more than its normal number of electrons, for those taken away from the original substance must, of course, go somewhere. There are many ways of bringing about such a condition.

/ 2.3

2.3 The electron theory explains the flow of current in a conductor as being merely a stream of electrons moving along the conductor from atom to atom in a definite direction under the influence of an outside applied force or pressure. Substances whose atoms have loosely attached outer electrons are good conductors while substances to whose atoms all electrons are tightly bound contain normally very few free electrons and are therefore poor conductors, or good insulators.

2.4 Under a certain combination of physical conditions, electrons will pass from a conductor into the surrounding space. The principal conditions are as follows:

(a) The metal which emits the electrons must have a high temperature, or be acted upon by some form of radiant energy.

(b) Practically all surrounding insulating material, including the air, must be removed from contact with the metal electrodes.

(c) There must exist some force which overcomes the atom's attraction for the electron; for example, a positively charged plate brought near the substance from which the electrons are emitted will produce this force.

(d) Surface conditions of the substance from which the electrons are emitted must be favourable; for example, a chemical composition at the surface that emits electrons freely is commonly used to increase the activity.

Thermionic valves are designed for a large number of uses and to operate under a wide variety of conditions. The number and arrangement of the electrodes in each type of valve is determined largely by the designed electrical characteristics of the valve. This provides a logical classification of thermionic valves according to the number of electrodes they contain.

3. TWO ELECTRODE VALVES (DIODES).

3.1 The simplest form of device for the flow of a stream of electrons through an open space is the two-electrode thermionic valve shown diagrammatically in Fig. 1. This figure represents a glass bulb containing two electrodes, one in the form of a metallic filament called the cathode, which is so treated as to be the "emitting" electrode, and the other a metallic plate called the anode. All air and other gases are removed from the tube and the cathode is heated to a red glow. One method of heating the cathode is by a current of electricity from a relatively low voltage battery, A, as shown in this figure. Another method is to supply the heat by a separate electrical heating element (unit) which is imbedded in,

/ but

but electrically insulated from, the cathode. This heating unit is supplied by either a D.C. or an A.C. low voltage source. The cathode must, of course, be in the form of a metallic filament which readily permits heating by either of these two methods.

3.2 In Fig. 1 it should be understood that the sole function of battery A is to heat the cathode; certain secondary effects which may be traced to this battery are explained later. Assuming that the cathode is either of the proper chemical substance, or is coated with some chemical substance which will promote the emission of electrons, all conditions necessary for electron flow, with the exception of (c) above, have been provided. If now a battery is connected between the cathode and the metallic anode in such a manner as to give the anode a positive charge, this charge will exert a force of attraction on any electrons that may be emitted into the space surrounding the heated cathode. Electrons escaping from the cathode will be drawn to the anode by the force set up by its positive charge, and a continuous flow of electrons from cathode to anode will result. The speed with which the electrons cross the gap is determined by the potential of the anode with respect to the cathode.

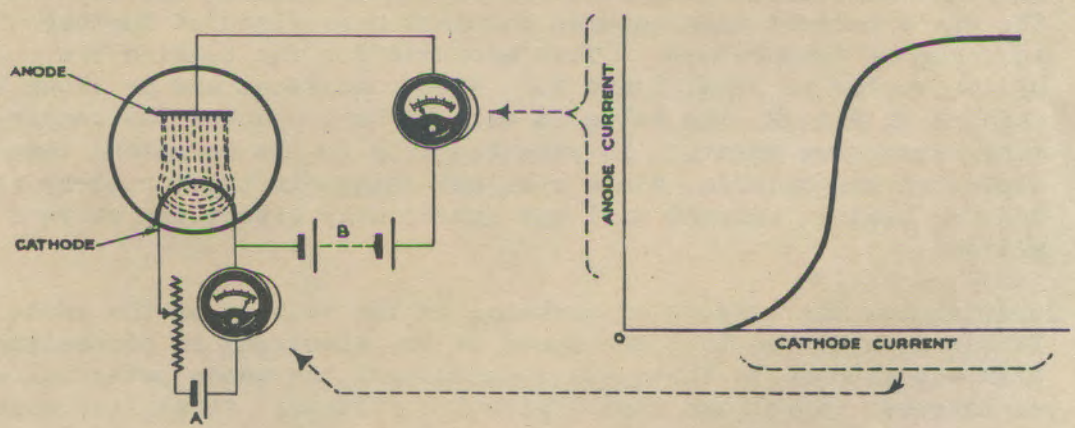

THE DIODE VALVE
FIG. 1

This flow of electrons is simply an electrical current, and the battery B will sustain this current in the same way that a battery sustains a current when it is connected to any closed electrical circuit. (It may be noted that the flow of electrons from cathode to anode is in the opposite direction from that conventionally assumed for the flow of electric current.) With a milliammeter connected in the anode circuit as shown in Fig. 1, the actual value of the current under these conditions will be indicated.

This current may be changed by changing the conditions which cause it. If the rheostat in series with the A battery is adjusted so

/ as

as to decrease the heating current in the cathode, thereby lowering its temperature, it will be found that the "space" current would also decrease, and with the cathode reduced to room temperature, the milliammeter in the anode circuit would read zero, indicating zero space current. On the other hand, if the voltage of the A battery is increased, thereby increasing the cathode heating current and in turn increasing its temperature, the space current would be increased. This general relation between cathode current and space current for a representative thermionic valve is illustrated by the curve in Fig. 1.

3.3 Space Charge. There is a limit, however, to the increase in space current that can be obtained by increasing the cathode temperature. This is due to the fact that electrons repel each other because they are all negatively charged, and free electrons in the space tend to keep new electrons from leaving the cathode. In other words, the electrons themselves, when emitted, tend to counteract further emission of other electrons, or to exert a repelling force on electrons within the cathode. This is called the "space-charge effect". When the cathode reaches a certain temperature, there will be so many electrons in the space that their repelling effect prevents any further increase in the number leaving the cathode. The space current then becomes constant regardless of further increase of temperature. This accounts for the bending over of the curves in Figs. 1 and 2. When conditions are as shown by point A in Fig. 2, the valve is said to have reached the temperature saturation point. In practice this is the operating temperature for the cathode, since a slight change in the A battery voltage or heating current will not appreciably affect the valve's action.

3.4 Consider now the effects of a change in the voltage of the anode. It has been stated that the speed of the electrons in proceeding from the cathode to the anode depends upon the anode potential and an increase in voltage should give two effects; first, the space current would be increased inasmuch as electrons are transferred more rapidly; second, since the number of electrons in the space surrounding the cathode is reduced, the space-charge effect will be lessened and the saturation point will be reached only at a higher temperature. The curves shown in Fig. 2 illustrate such results - V_1, V_2 and V_3 represent three anode voltage values and it is seen that increasing the voltage increases the space current, extending the curve upward until a new temperature saturation point is reached. The cathode heating current which will give stable valve operation, i.e. the value giving saturation, depends on the anode voltage, and any change in anode potential will affect the stability of the value unless a corresponding change is made in the cathode heating current. There is always a practical limit, however, to the cathode heating current that may be used, because the cathode will either burn out or its life be greatly shortened if the current rises above a certain value.

/ Figs. 2 and 3

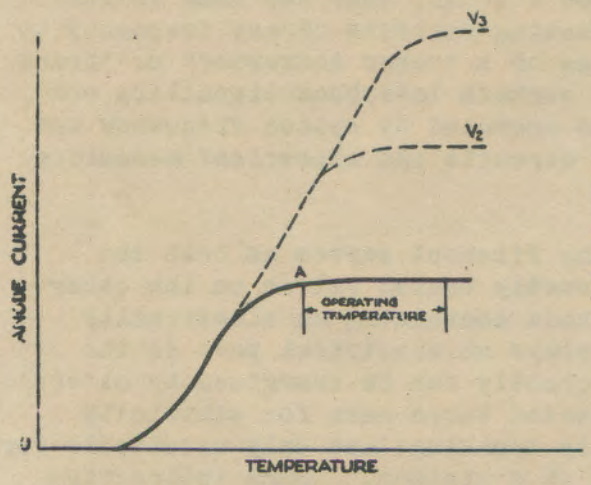

CATHODE TEMPERATURE VS. ANODE CURRENT CHARACTERISTIC

FIG. 2

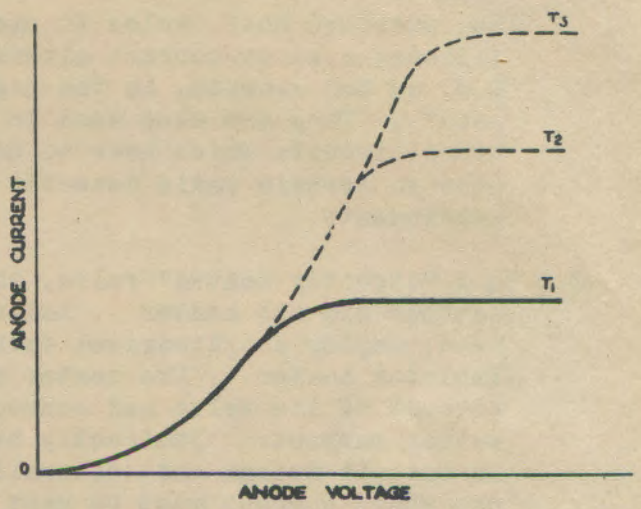

ANODE VOLTAGE VS. ANODE CURRENT CHARACTERISTIC

FIG. 3

Fig. 3 is a curve showing the relation between space current and anode voltage for three different values of cathode temperature. Here, as the anode voltage is increased from zero, there is an increase in the space current until a saturation point for the given temperature is reached. The failure of the space current to continue its increase with increasing anode voltage is now due to the fact that the cathode is emitting the maximum number of electrons possible for the particular temperature. If the cathode temperature is increased, the voltage saturation point will increase correspondingly, as shown by T_2 and T_3 in the figure. In practice, the thermionic valve is operated with an anode voltage well below the voltage saturation value.

3.5 If the B battery shown in Fig. 1 is reversed so that the anode is at negative potential with respect to the cathode, the electron stream would immediately cease because of the removal of the attracting positive charge from the anode and, in the absence of an electron stream, the battery current would cease. As the anode is not heated an electron stream will not flow from it to the now positive cathode.

3.6 An electron stream is set up only from the hot cathode to the anode and only when the anode is at a positive potential with respect to the cathode. In other words, the device acts as a one-way conductor or valve and depends upon heating or thermal effect for its action. This is the reason for the title "thermionic valve".

3.7 The property of allowing current to pass in one direction only is sometimes referred to as "unilateral conductivity". As two-electrode valves or "diodes" as just described will allow only

/ the

the positive half cycles to pass through, they are used as rectifiers, i.e. to convert alternating currents of any frequency to D.C. as for example, in the case of a "power converter" or "power pack". They are also used in certain telephone signalling and other circuits which have to be operated by speech frequency and also in certain radio detector circuits and electrical measuring instruments.

3.8 In a "directly heated" valve, the filament serves as both the cathode and its heater. Indirectly heated valves on the other hand, employ a cylindrical cathode containing an electrically isolated heater. The heater plays no electrical part in the circuit of the valve and consequently can be energised by alternating current. Indirectly heated tubes make for simplicity in circuit design and, generally speaking, are only unsuitable for use where current must be kept at a minimum. Some indirectly-heated valves used require a heating current of 1 ampere.

3.9 It should be emphasised here that the flow of electrons from the negative filament to the positive anode is opposite to the direction in which an electric current has been assumed to pass, viz. from positive to negative.

4. THREE ELECTRODE VALVES (TRIODES).

4.1 The type of valve commonly employed in long distance and similar apparatus differs from the two electrode valve in that a third electrode or "grid" is interposed between the cathode and anode as indicated in Fig. 4. In this device the electrons which leave the cathode must pass through the meshes of the grid to reach the anode. Their passage, therefore, is influenced by any force that may be set up by a charge on this "grid". Due to the relative positions of the grid and the anode with respect to the cathode, a change of potential of the grid has a greater effect on the space current than an equal change in the potential of the plate.

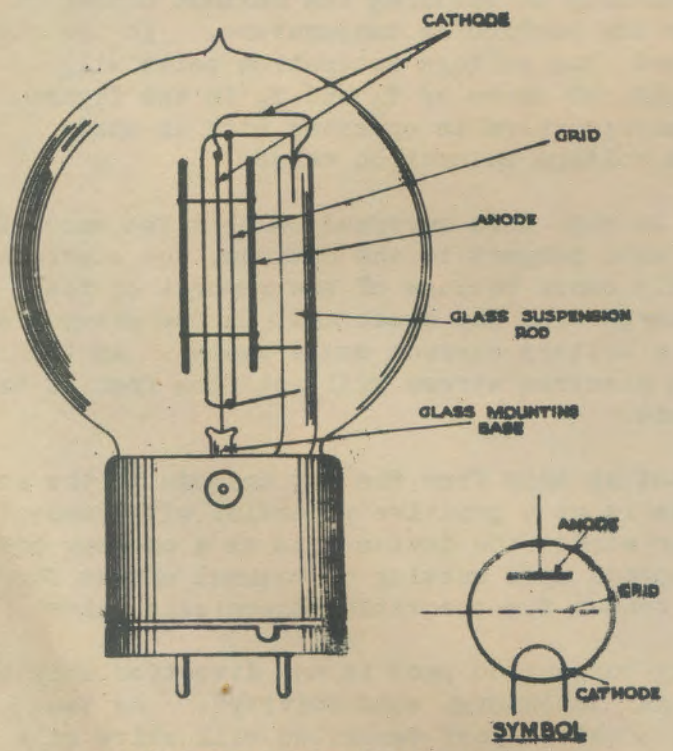

3 ELECTRODE (TRIODE)
FIG.4

/ 4.2

4.2 It is on this principle that the 3-electrode valve operates and, by virtue of its extreme sensitivity, the valve may be looked upon as an inertialess relay indifferent to frequency. By suitably "biasing" the grid with a low fixed negative potential, as from a small battery, the anode current can be made to reproduce either an exact or a distorted image of the original alternating current wave as may be desired. This feature will be dealt with in a description of the amplifier in the next paper.

4.3 If a fixed anode potential difference is applied between the cathode and the anode of the valve and if the cathode current is constant, it is possible, by applying a series of different voltages to the grid, to obtain a corresponding series of anode current readings. Shown graphically, these would follow a curve similar to that in Fig. 5, where the vertical ordinate represents anode current (Ia) and the horizontal ordinate represents grid volts (Vg). Such a curve, which gives information as to the performance to be expected, is called a "characteristic curve" of the valve. Most manufacturers supply, with their valves, curves plotted for different anode voltages likely to be used in practice.

4.4 Examination of the 100 volt curve, Fig. 5, shows that at -22 grid volts anode current does not flow. At -20 grid volts anode current commences, and it then rises with increasing steepness to the point corresponding to about -12 grid volts. From then on the anode current increase is almost directly proportional to the change in grid volts (as shown by the straightening out of the curve), until at +6 grid volts the rate of increase commences to fall away with increasing rapidity until saturation point is reached at +12 Vg, after which a further increase is not possible.

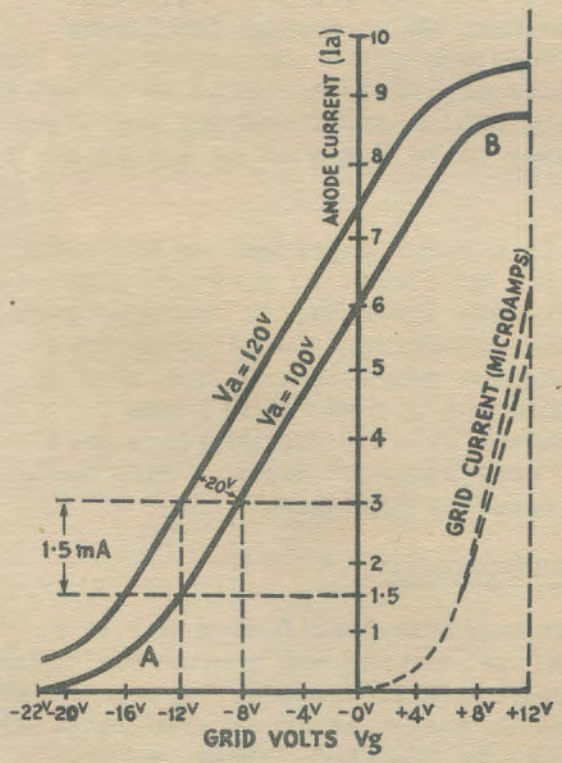

CHARACTERISTIC CURVES.
ANODE CURRENT VERSUS GRID VOLTS.

FIG. 5.

4.5 To amplify signals faithfully, the characteristic curve of a thermionic valve needs to be steep with a long flat section. The steepness of the curve shows that a small variation in grid volts will produce a large variation in anode current, as compared with that produced by a valve having a flatter characteristic curve. The length of the straight line

/ portion

portion determines the amplitude or volume of incoming signal fed on to the grid which can be handled by the valve without distortion. Distortion would occur at the bends of the curve when the resultant variations of anode current would not be in proportion to the variations of impressed grid voltage. Such a result is frequently called a "non-linear" response or relationship.

4.6 Referring again to the 100 volt curve (Fig. 5), it may be seen that at -12 grid volts the anode current is 1.5 mA, whilst at -8 grid volts it is 3 mA, i.e. a change of 4 grid volts produces an increase of 1.5 milliamps in the anode current. If the grid bias were left at -12, it would be necessary to increase the anode voltage by 20 (see curve Va = 120) to obtain a similar increase. So that a change of 4 grid volts produces the same change in anode current as an anode voltage change of 20 volts. The ratio of the change of voltage on the anode to the change in grid potential producing an equivalent effect is called the amplification factor of a valve. In the valve under discussion, the amplification factor is $\frac{20}{4}$, i.e. 5.

4.7 Triodes giving a high value of voltage amplification are characterised by high impedance and correspondingly low anode current, and consequently at the standard anode voltage are not capable of handling much power. "Power" valves, which supply the larger amounts of energy, have a low impedance but a correspondingly low amplification; hence in long line amplifier circuits we invariably find either a single valve having medium amplification and power handling capacity, or else a power valve preceded by a voltage amplifier valve.

4.8 Included on the graph in Fig. 5 is a curve representing the "grid current". As may be expected, the grid when at positive potentials with respect to the cathode, attracts electrons in the same manner as the anode and a small current - measurable in micro-amperes - flows from grid to cathode taking the conventional direction of current flow. In effect, the grid and cathode form a small diode, the conductivity of which varies with the positive grid potential, as indicated by the "grid current" curve. This feature is made use of in grid current detector circuits.

5. FOUR ELECTRODE VALVES (TETRODES OR SCREEN GRID).

5.1 At relatively low frequencies the amplification factor (μ) of a three-electrode valve depends on the spacing and proportioning of the three electrodes. It should be noted, however, that the distance from the cathode to the anode should be great when compared with the distance from the cathode to the grid. Thus, within reasonable limits μ can be increased by locating the anode closer to the cathode and decreasing the size of the open spaces in the control grid mesh. However, closer spacing increases the electrostatic capacity between the electrodes, and when valves are used with high frequencies such as encountered in some carrier systems,

/ the

the effect of this capacity becomes important. This is particularly true in regard to the capacity between the anode and grid circuits, where the coupling effect at the higher frequencies tends to limit the amplifying factor.

5.2 To overcome this trouble, the screen grid valve was developed. In this valve (see Fig. 6), an electrostatic screen or fourth electrode is introduced between the normal grid and anode. This fourth electrode or screen is operated at a positive voltage somewhat below the anode voltage, and is connected by an external by-pass condenser to the cathode. By this arrangement, the grid anode capacitance can be reduced from, say, 8 micro-microfarads (0.000008 μF) to 0.01 micro-microfarads or less. Valves employing this feature would be correctly named "Tetrodes" because of the four electrodes. They are usually known, however, by the name "screen grid." These valves are not in general Departmental use, but are of interest because of the later developed five electrode or pentode valve.

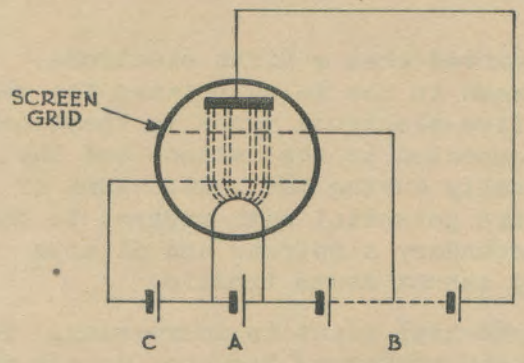

THE SCREEN GRID VALVE.

FIG. 6.

5.3 With the tetrode, the screen is operated at a positive voltage. In consequence, electrons are drawn towards it from the cathode. Owing to the wide mesh of the screen, however, and the higher positive potential of the anode, most of these electrons pass on to the anode. An effect of the screen is to make the anode current largely independent of anode voltage and more proportional to screen voltage, as long as the latter is lower than the former. The independence of anode current to anode voltage gives a higher amplification, and in this feature, coupled with the fact that the electrostatic screen has made the valve more stable, lies the explanation why the "screen grid" has a higher gain than the "triode."

6. FIVE ELECTRODE VALVES (PENTODES).

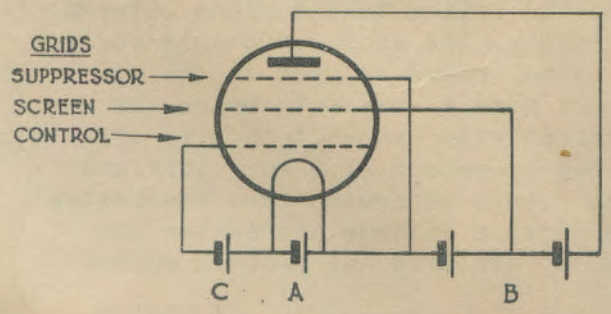

THE PENTODE VALVE.

FIG. 7.

6.1 In all thermionic valves, electrons striking the anode may, if moving at sufficient speed, dislodge other electrons. In two and three electrode types of valves, these vagrant electrons usually do not cause any trouble because they are eventually drawn back to the anode. Emission from the anode caused by such bombardment is called secondary

/ emission

emission, because the effect is secondary to the original cathode emission. In the case of screen-grid valves (tetrodes), the proximity of the positive screen to the anode offers a strong attraction to these secondary electrons and particularly so if the anode voltage swings lower than the screen voltage. This effect lowers the anode current and limits the permissible anode swing for tetrodes.

6.2 The anode current limitation is removed when a fifth electrode, known as the "suppressor", is placed in the valve between the screen and anode. The family name for five-electrode types is "pentode". The suppressor grid is usually connected to the cathode and the connection is usually made internally during the manufacture of the valve. Because of its negative potential with respect to the anode it retards the flight of secondary electrons and diverts them back to the anode where they cannot cause trouble.

6.3 The use of pentode valves in departmental plant is increasing. For general purposes the triode has been preferred because, unless feedback is used, the high impedance of the pentode makes for poor fidelity on low (e.g. 600 ohms) impedance loads, due to the difficulty in matching. The total harmonic distortion in a pentode varies with output level, being greatest when maximum power is being delivered. Under normal working conditions the commercial pentode averages about 10% total harmonic distortion. In this respect they are inferior to triodes but their advantages are high amplification combined with power output.

7. INDIRECTLY HEATED THERMIONIC VALVES.

7.1 Previous remarks were mostly directed to the type of thermionic valve in general use in departmental plant, viz. the "directly heated" three-electrode valve or triode, in which the hot cathode takes the form of a filament. The filament is directly heated to the necessary temperature by the current passing through it.

7.2 On certain later equipments valves with indirectly heated cathodes have been introduced. These valves employ a separate cathode which is heated by an enclosed hot wire or heater corresponding to the filament described above. Whilst this change means that an extra contact pin or prong is fitted to the base of the valve, the term triode still applies because the action taking place between the three operating electrodes, namely, the anode, the grid and the cathode, is unaltered. The heater plays no part in the electrical circuit of the valve but merely serves to raise the temperature of the cathode sufficiently to cause it to give off electrons. The cathode in this case consists of a very thin and suitably coated metal cylinder or sleeve separated from the heater by an insulating medium. Fig. 8 shows a cathode and heater and the symbols for indirectly heated screen grid and pentode valve.

/ Fig. 8

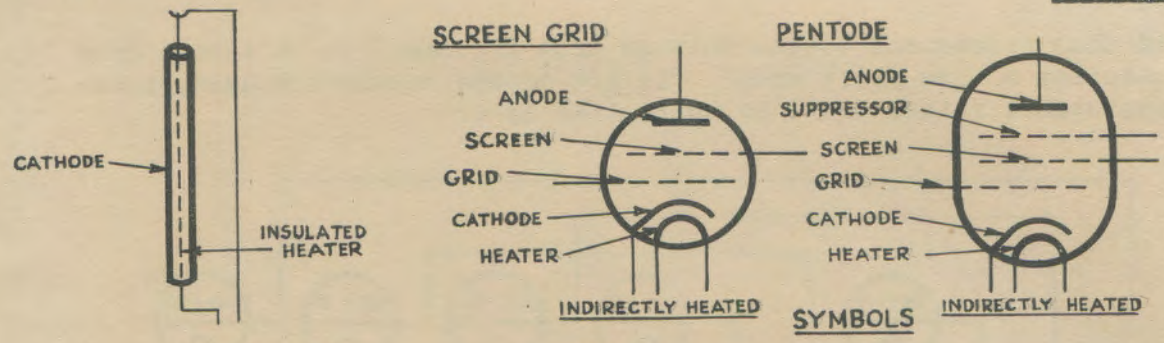

FIG. 8.

7.3 The indirectly heated valve has many advantages. It is free from cathode current noise and can be operated readily from alternating current or unsmoothed direct current. The electrical circuit of the valve can be made simpler, because an allowance need not be made for the difference of potential over the cathode or heater when setting the grid bias voltage. Heater type rectifier valves can be designed with the cathode and anode closer together, thus reducing voltage drop, and amplifiers can be made with grid and cathode closer together, resulting in a consequent improvement in gain.

7.4 Indirectly heated valves have two disadvantages, though these are not always of importance. The first disadvantage is that low consumption heater valves are not commercially developed, and the second disadvantage is that, after switching on, some appreciable time must elapse before the heater type valve will commence to function, due to the delay in indirectly raising the cathode to emission temperature. Types of indirectly heated valves used by the Department are the VT 90 and the VT 91, which will be found in G.E.C. type Carrier Systems, and the A.C.P. and A.C.P.1 found in T.M.C. equipment.

8. GRID BIAS.

8.1 Grid bias is always specified with respect to the cathode voltage. Supposing that the cathodes of five valves, each requiring 4 volts, were operating in series from a 20 volt supply, then at the negative end of the chain the filament voltage will be -20. To bias this valve at, say, -9 volts, a grid voltage of -29 would be necessary. In practice, this would be obtained by connecting a 9 volt battery with the negative to the grid and positive to the last cathode terminal. As the string of filaments may be regarded as a potentiometer across the -20 volt battery, negative bias voltages for valves operating towards the positive end could be obtained by tapping the series filament circuit at points of suitable negative potential.

8.2 Fig. 9 shows a hypothetical group of standard 1 ampere valves connected in series, the additional series resistances being so arranged that the correct bias is given to each grid. As the current passing is approximately 1 ampere, the resistance values

/ in

in ohms correspond to the voltage drop figures, i.e. 4 volts' drop requires 4 ohms resistance. If 1/4 ampere valves are used, these resistance values would be multiplied by 4.

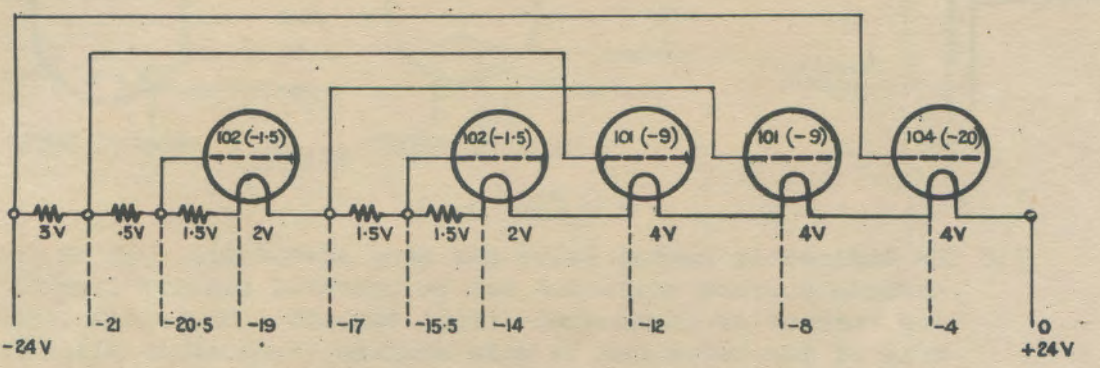

STANDARD VALVES ARRANGED TO OBTAIN SELF BIAS

FIG. 9

8.3 In practice this ideal arrangement could not be entirely realised as the full 24 volts are not available for biassing due to a few volts being dissipated in control devices, or alternatively chokes, at the positive end. Fluctuations at the busbars also account for reduced P.D. In offices where a 46 volt exchange battery is installed as well as the 24 volt filament battery, grid biassing potentials unobtainable from the filament "drop" can be provided by means of a separate potentiometer connected across the 46 volt battery.

8.4 In an indirectly heated valve the grid bias arrangements are simpler and can usually be obtained directly from the potential drop in the anode circuit To do this the grid is connected to the negative of the anode battery and a resistance is connected in series with the cathode to the negative, giving a P.D between the grid and cathode. Fig. 10 shows the arrangement described The grid is the most negative of the electrodes, the cathode relatively positive, i.e. the grid is negative with respect to the cathode.

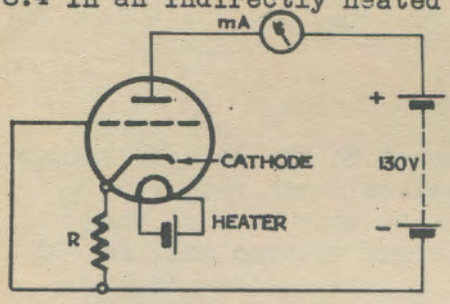

FIG. 10

9. RELATIONSHIPS BETWEEN VALVE ELEMENTS.

9 1 Anode A.C. Resistance (see other terms on page 2) is the A.C. internal resistance - anode to cathode - when the valve is operating. In other words the resistance offered by the anode-cathode path to the passage of an alternating current. It is given by -

$$Ra = \frac{\text{Change of Va}}{\text{Change of Ia}}$$

/ The

The change of Ia for a change of Va is determined by experiment. The output impedance should match the load into which it has to work. Matching can be arranged by means of a transformer.

9.2 Amplification Factor ('μ'). As already defined, this is the change of anode volts (Va) necessary to produce the same change in anode current (Ia) as a given change in grid volts (Vg). The amplification factor of a triode depends on the mechanical construction of the valve, and in a tetrode on the voltages applied to the grids and anode.

9.3 Mutual Conductance (or Transconductance) (Gm). Often called "Slope". This is the ratio of Amplification Factor to Anode A.C. Resistance, i.e. $\frac{\mu}{Ra}$. The expression "milliamps per volt" is often used to denote Mutual Conductance and refers to the change in anode milliamps brought about by a 1-volt change in grid volts. Mutual conductance is usually expressed in micro-mhos for convenience (micro, a millionth). A good amplifier needs a high value of Gm, i.e. a large μ and low Ra.

10. TYPES OF THERMIONIC VALVES USED IN TELEPHONE PLANT.

10.1 The valves in general use in all earlier departmental telephone plant are the types 101, 102, 104, and V.T. 25. The first three are of the well-known dull emitter type. They have spherical glass bulbs containing vertical electrodes, a plate and grid on each side of the filament.

10.2 The 101 Valve is a general purpose type which serves as an amplifier or a detector and is capable of handling medium currents. It is used in telephone repeaters and carrier systems as an amplifier and in telegraph carrier systems and measuring apparatus as oscillator, amplifier and detector. This valve has a large cathode (of M shape) surrounded by a wide meshed grid, fairly close to which are two parallel plates of equal size to the grid forming the anode. Fig. 11 gives details of the 101 valve.

10.3 The 102 Valve is a voltage amplifier, having a very large amplification factor. This valve which can only handle small currents invariably precedes a valve having larger output such as a 101. Where a large current is not required the 102 can be used as a detector, e.g. as in transmission measuring equipment. It is employed as a voltage amplifier in telegraph carrier systems. The 102 valve has a large finely-meshed grid mounted close to a small cathode. Parallel plates forming the anode are

/ provided

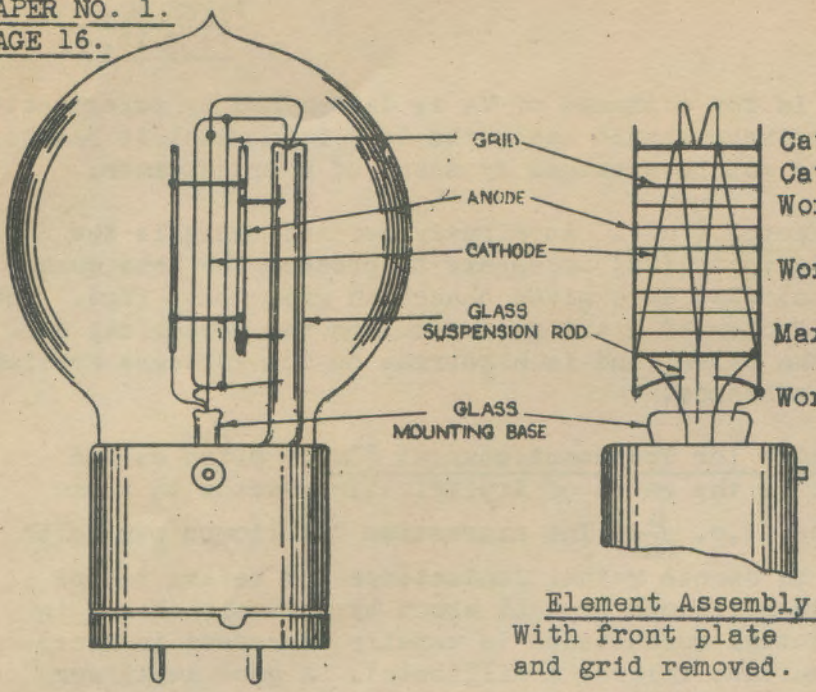

Element Assembly. With front plate and grid removed.

Cathode Voltage	4.4 volts
Cathode Current	0.97 amps
Working Anode Voltage	130 volts
Working Anode Current	8 mA
Max. anode Voltage	160 volts
Working Grid Voltage	-9 volts
Amplification Factor	5.9
Output as Oscillator	1 watt
Output Power	0.059 watt
Impedance	6,000 ohms
Gain	29.5 db.
Expected Life	20,000 hours.

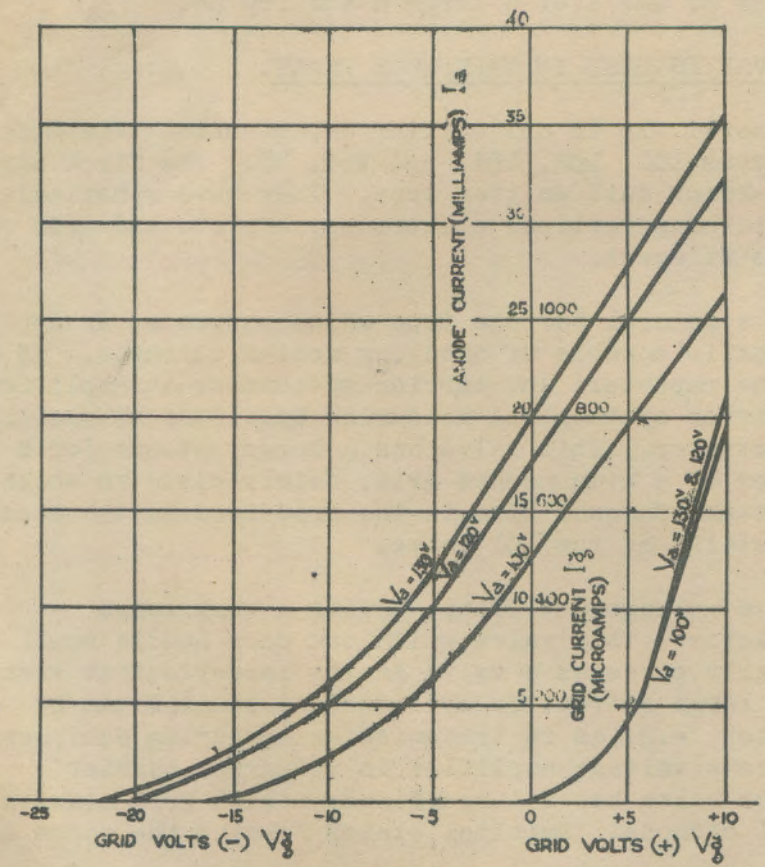

Details of the No. 101 Valve.

Notes.
This valve gives a medium amplification factor and an impedance of approx. 6,000 ohms. Will not handle as much power as a '104' valve but has a greater amplification factor. Used in carrier telephone and telegraph systems, telephone repeaters, oscillators and transmission measuring equipment.

FIG. 11.

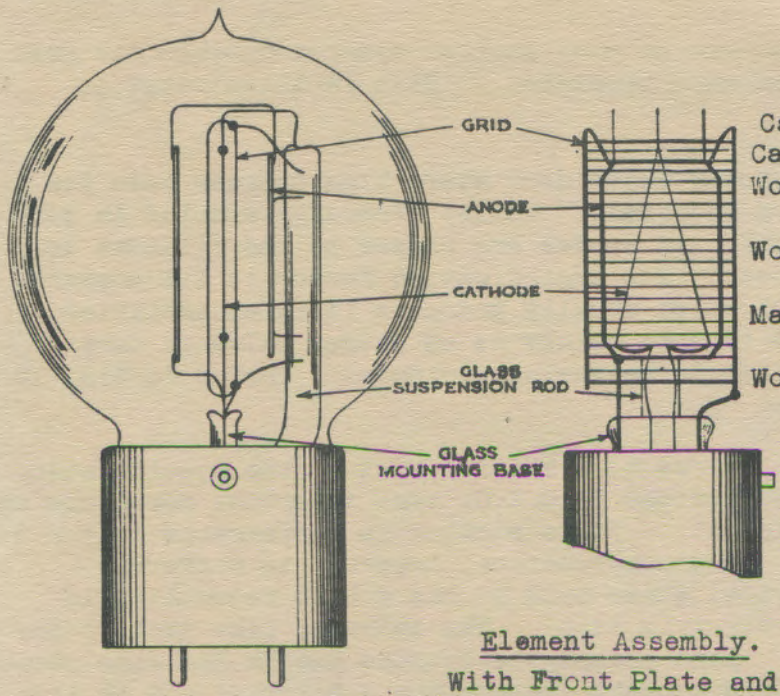

Element Assembly.
With Front Plate and Grid Removed.

Cathode Voltage	2 volts
Cathode Current	0.97 amps.
Working Anode Voltage	130 volts
Working Anode Current	0.75 mA
Max. Anode Voltage	160 volts
Working Grid Voltage	-1.5 volts
Amplification Factor	30
Output Power	0.0042 watts
Impedance	60,000 ohms
Gain	33.5 db
Expected Life	20,000 hours

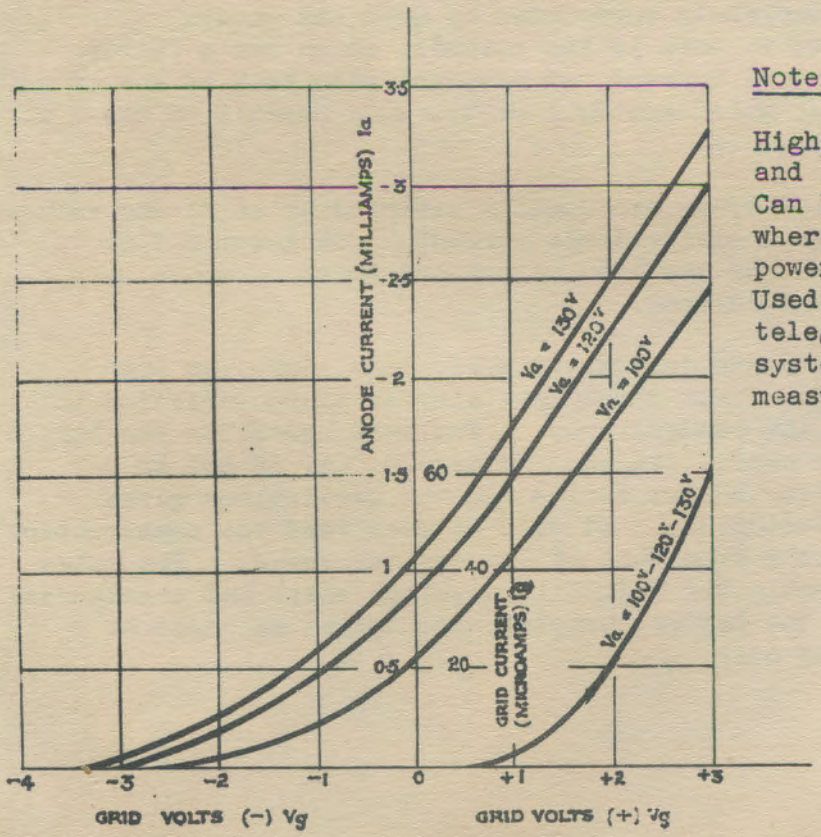

No. 102 Valve and Curves.

FIG. 12.

Notes.

High amplification factor and impedance, small output. Can be used as a detector where only a very small power output is required. Used in amplifier in carrier telegraph and telephone system, transmission measuring equipment.

provided, but these are of much smaller dimensions than the grid from which they are well separated. This is illustrated in Fig. 12.

10.4 The 104 Valve is a power valve used where high outputs into low impedance loads are required. Whilst generally similar in construction to the 101, its anodes are closer to the filament to give a low impedance. Its amplification factor is 2.4 compared to the 6 of the 101 which usually precedes it in an amplifier circuit. The 104 is used mainly as an output valve in carrier amplifiers as well as in measuring equipment. Refer to Fig. 13 for fuller details.

10.5 The V.T. 25 Valve conforms to a British Post Office specification and is standardised for use in G.E.C. type telephone repeaters and other English equipment. It is similar in performance to the S.T.C. valve 101. The construction, however, is different. Instead of a spherical glass bulb it has a bulb resembling in shape an ordinary electric lamp. The cathode, like that of the 102, is V-shaped. Bent around the cathode and in the same plane as it, is a wire loop support (resembling a hairpin) and on this loop is wound a fine spiral of wire, the whole assembly forming a grid encasing the cathode. Outside this again is mounted a metal tube of elliptical section which forms the anode. Thus the cathode is completely surrounded by grid and anode. Thoriated tungsten is used in the cathode, which has a fairly bright glow at normal current, as compared with that of any of the S.T.C. series, which are dull emitters. Details of the V.T. 25 are shown in Fig. 14.

10.6 The 101, 102 and 104 types are usually referred to as "1 amp valves" by virtue of their normal cathode current. On later S.T.C. equipment a new series has been introduced which consumes only 1/4 ampere filament current.

10.7 The 1/4 ampere tubes are designated 4019, 4020, 4021 and 4022 respectively. The first three have similar characteristics to the 101, 102 and 104 respectively. The 4022 resembles the 101 but has a greater amplification. Figs. 15, 16, 17 and 18 attached illustrate the new series and the particulars given thereon should be studied. It will be seen that the construction differs considerably from that of the earlier types. The tubes more closely resemble the V.T.25 in envelope shape and arrangement of electrodes. The latter, however, are set at an angle of approx. 45° to the axis.

/ The

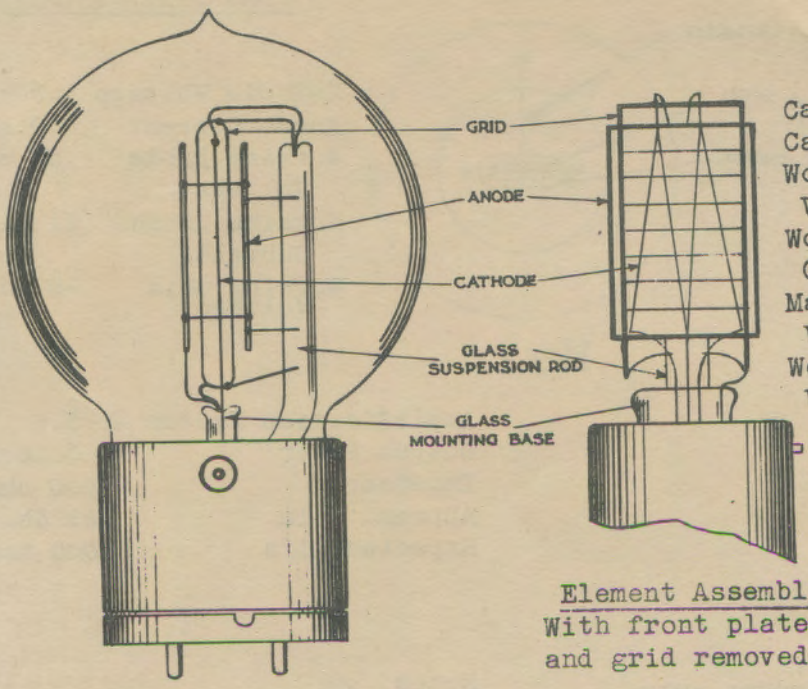

Element Assembly
With front plate
and grid removed.

Cathode Voltage	4.4 volts
Cathode Current	0.97 amps
Working Anode Voltage	130 volts
Working Anode Current	20 mA.
Max. Anode Voltage	160 volts
Working Grid Voltage	- 20 volts

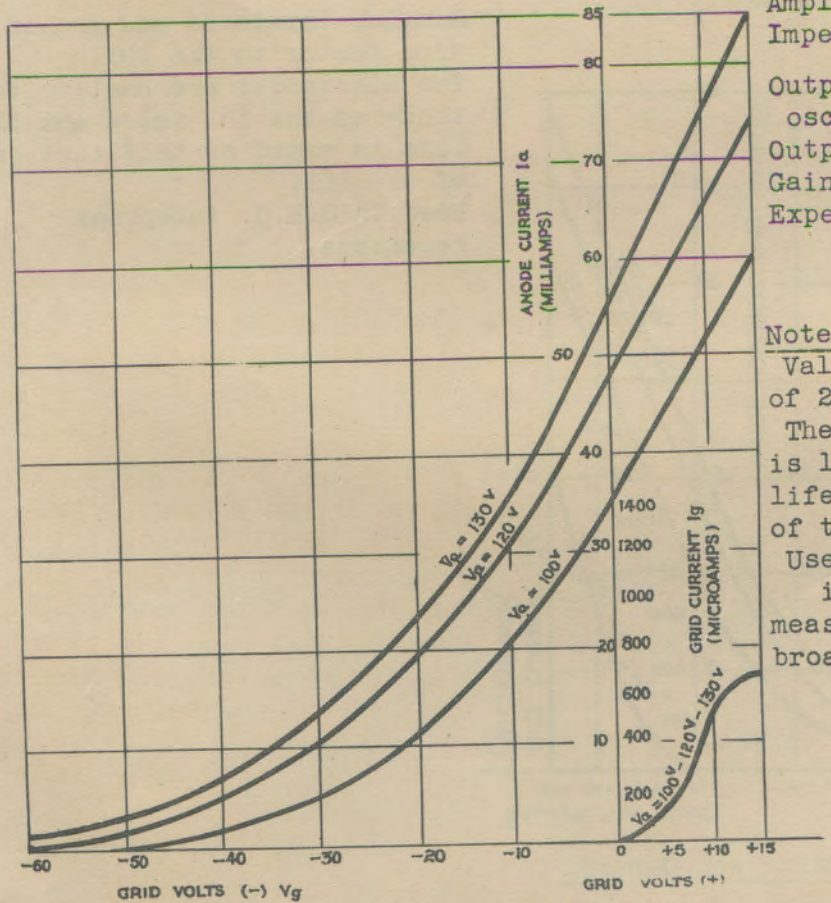

Amplification Factor	2.4
Impedance at 20 mA	2000 ohms
Output as oscillator	2 watts
Output Power	0.17 watts
Gain	26 db.
Expected Life	5000 hours

Notes.

Valve offers an impedance of 2000 ohms at 20 mA.

The amplification factor is low and the useful life is shorter than that of the 101 or 102.

Used in amplifier circuits in carrier systems and measuring equipment, also broadcast pick-up amplifiers.

No. 104 Valve and Curves.
FIG. 13.

LONG LINE EQUIPMENT.

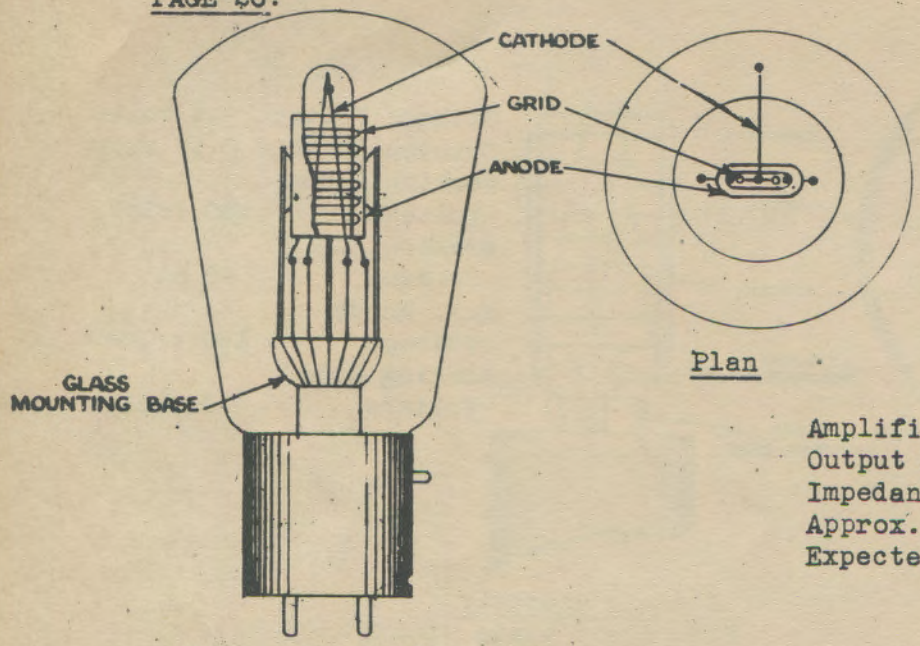

Plan

Element Assembly
With portion of plate broken away to show grid and filament

Cathode Voltage	4.5 volts
Anode Current	0.8 amps
Working Anode Voltage	150 volts
Working Anode Current	11 mA
Working Grid Voltage	-8 volts

Amplification Factor -	5.6
Output Power	0.06 watts
Impedance	6,000 ohms
Approx. Gain	29 db.
Expected Life	10,000 hours.

Notes.

Similar impedance and amplification factor to the 101.
The electrodes are smaller than those of the 101 valve and the life is rated at half that of of the 101.
Used in G.E.C. telephone repeaters.

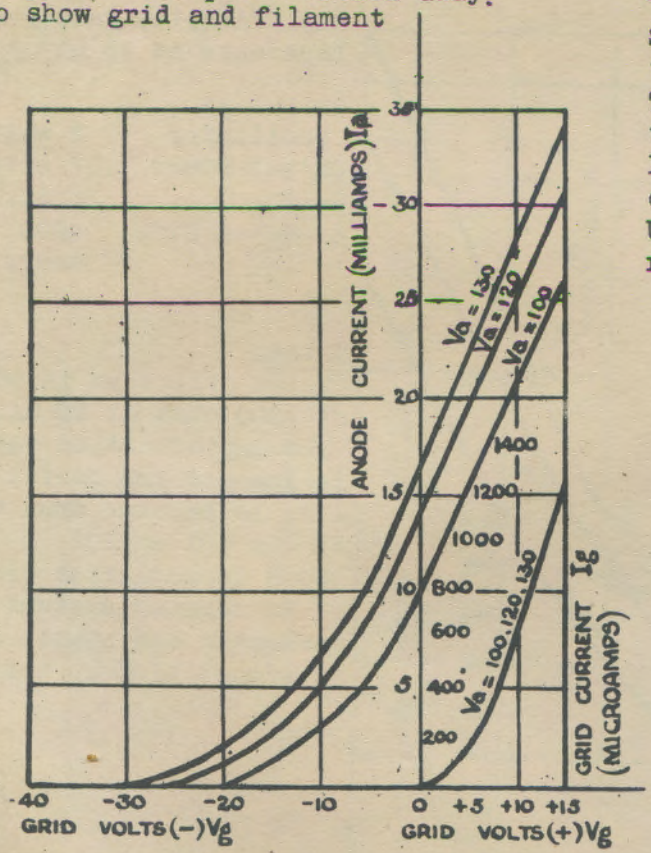

V.T. 25 Valve and Curves.

FIG. 14.

The following are brief notes on each of these valves.

Valve No. 4019. Wind Grid Mesh (18 turns) M shaped cathode close to grid, performs similar functions to valve No. 101.
Use. Restricted at present to programme carrier systems e.g. in modulators and demodulators (see Fig. 15 attached).

Valve No. 4020. Fine grid mesh (32 turns) V shaped cathode close to grid, plates spaced further apart, similar functions to valve No. 102.
Use. Restricted at present to programme carrier systems as oscillators or amplifiers. Also in 1000 ohms V.F. ringers (see Fig. 16 attached).

Valve No. 4021. Medium grid mesh (24 turns), M shaped cathode. Plates forming anode close together. Intended as a replacement for valve No. 104. Application limited. (See Fig. 17 attchd.).

Valve No. 4022. Fine grid mesh (30 turns), M shaped filament close to grid, plates forming anode close to grid. Similar functions to valve No. 4019.
Use. Restricted at present to programme carrier systems applied where higher gain than offered by valve No. 4019 is required, e.g. pilot amplifier. (See Fig. 18 attached.)

The constants and typical working conditions of these four valves are as follows:-

Constants.

Valve	Cathode Current	Nominal Cath. Voltage	Amplification Factor	Mutual Conductance	Capacities		
					Grid Anode	Anode Cathode	Grid Cathode
	Amps	Volts		mA/V	μμF	μμF	μμF
4019	0.25	4	⁎ 7	⁎ 1.17	5.4	4.8	7.3
4020	0.25	2	⁎ 30	⁎ 0.6	6.3	4.4	6.2
4021	0.25	4	ϕ 6	ϕ 3	9.1	4.6	8.0
4022	0.25	4	⁎ 11	⁎ 1.83	9.6	4.3	8.1

⁎ At anode current of 0.8 mA.

ϕ At anode current of 23 mA.

/ Typical

Typical Working Conditions.

Valve	Anode Voltage Volts	Grid Bias Volts	Anode Current mA	Anode Resistance Ohms	Load Ohms	Output	Total Harmnc. db. below fundamental
4019	130	-8	8.1	5,100	5,100	79 mW	25
					10,200	63 "	31
					15,300	50 "	34
						peak volts	
4020	130	-1.5	0.92	46,000	46,000	21.4	30
					92,000	25.4	35.3
					138,000	26.2	37
4021	130	-8	22.5	2,050	2,050	140 mW	27
					4,100	100 "	31.5
					6,150	87 "	35
4022	130	-4.5	6.6	5,000	5,000	120 mW	20
					10,000	79 "	28
					15,000	76 "	33

10.8 Valve 4046A. A type of pentode used in departmental equipment is the Valve 4046A which is an indirectly heated valve. The constants and typical working conditions of this valve are:-

Constants.

Heater Voltage	4 volts	Grid-anode capacity	0.007 μμF
Nominal Heater Current	0.95 amps	Input capacity	10.7 μμF
*Amplification Factor	2,400	Output capacity	8 μμF
*Impedance	800,000 ohms	Maximum safe direct anode voltage	250 volts
		Maximum safe direct screen voltage	100 volts

* At V_a = 200 V_{g2} = 100 V_{g1} = -1.5

/ Typical

Typical Operating Conditions.

	(1)	(2)	(3)
Anode Voltage	250	200	150 volts
Grid Bias	-1.5	-1.5	-1.5 "
Screen Grid Voltage	100	100	100 "
Anode Current	3.9	3.8	3.7 mA
Anode Resistance	500,000	500,000	500,000 ohms
Load	50,000	46,000	30,000 ohms
Output	0.315	0.258	0.175 watts
2nd Harmonic -%	8.6	8.75	11.5
-db	21.3	20.7	19

The characteristic curves of the Valve 4046A are shown in Fig.19.

11. BALLAST LAMPS.

11.1 Before leaving the subject of thermionic valves, some mention should be made of ballast lamps or barretters. All that these units have in common mechanically with the thermionic valve is that they are glass bulbs containing filaments, but they are, however, very important so far as the successful operation of thermionic valve circuits are concerned, for the ballast lamp or barretter can be used to rigidly control the filament current of directly heated valves within very close limits.

11.2 One type of ballast lamp has a filament of iron wire operating in hydrogen. The passage of current heats the wire and its resistance instantly rises, thus effecting a reduction in current. Ballast lamps on carrier systems have various ratings, and those most generally known are those which control their respective filament currents to 1/4 amp., 1/3 amp, 1/2 amp, and 1 amp.

11.3 Similar devices are used in telephone battery feeds to compensate automatically for the variation in resistances of subscribers' lines. The barretter automatically introduces resistance into the short line. See para. 1, Paper 3, Telephony III. To illustrate the degree of control exercised by the ballast lamp, the 1 amp type has a voltage range of from 3 volts to 9.5 volts, and limits the current within 0.94 amp to 1.01 amps. Similarly the 1/4 amp type has a voltage range of from 7 volts to 14 volts, and controls the current to within the range of 0.24 amp to 0.26 amp. The carrier ballast lamp is tubular in form and fitted with an Edison screw base.

/ 12.

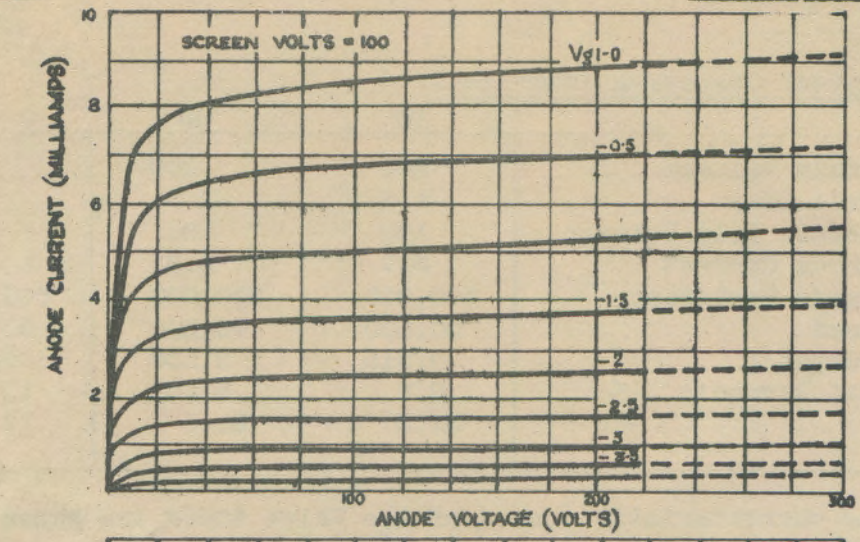

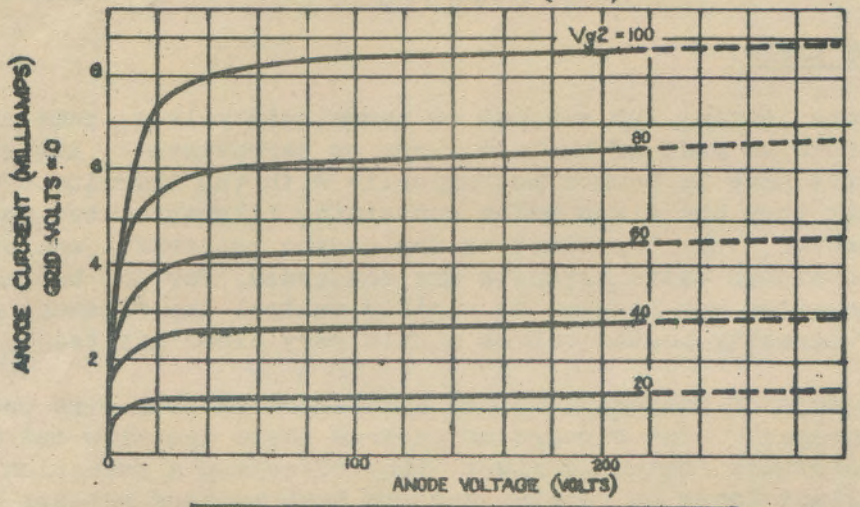

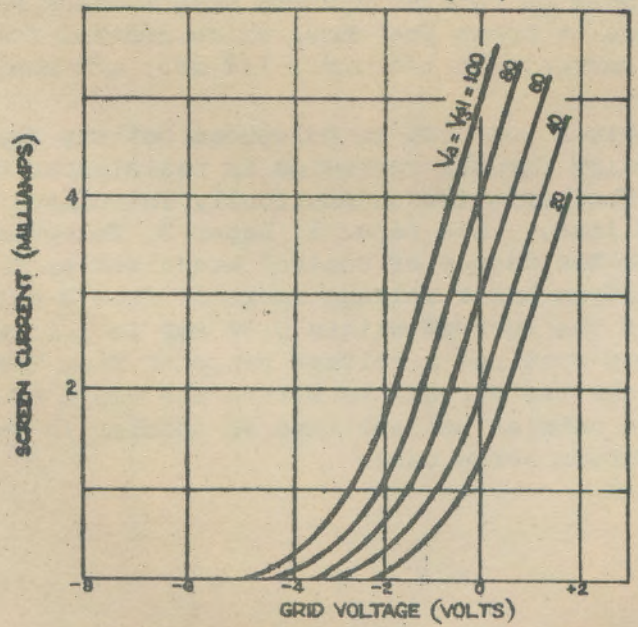

CHARACTERISTIC CURVES OF VALVES 4046A

FIG. 19

12. TEST QUESTIONS.

1. How many electrodes have the following thermionic valves:-
   Triode, Tetrode, Pentode.

   How many contact pins or terminals would each be fitted with if the valves were (a) Directly heated; (b) Indirectly heated.

2. What do you consider the advantages and disadvantages, if any, of indirectly heated type valves?

3. Why was the screen grid valve developed and what is its disadvantage?

4. At what value of anode current would the actual voltage at the anode of a valve operating into a resistance load equal the anode supply voltage? Why is a high load resistance necessary for large voltage amplification? Can the possible maximum voltage amplification ever exceed the amplification factor?

5. Describe the construction of a "directly heated" 3 electrode vacuum tube. What characteristics would be expected from a valve to be used as an amplifier?

6. How does the design of a thermionic valve affect its characteristics? To what effect does the term "thermionic valve" refer?

7. Define :-
   Amplification Factor,
   Anode A.C. Resistance,
   Anode and
   Cathode.

8. What factors control the electron emission in a thermionic valve? What is a diode?

END OF PAPER.

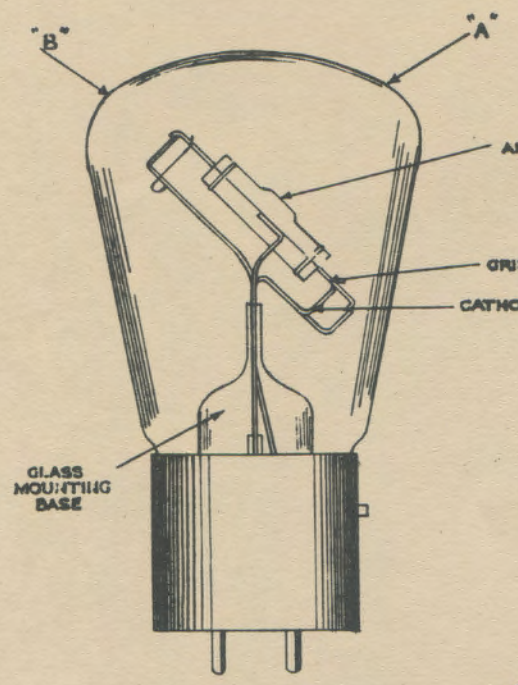

Element Assembly.

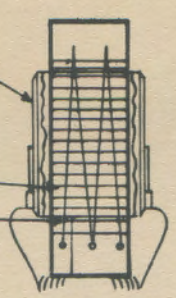

View from "A". With portion of plate broken away to show grid and filament.

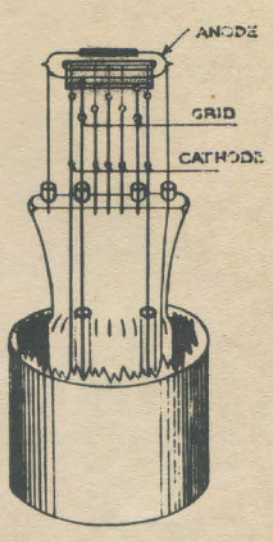

View from "B"

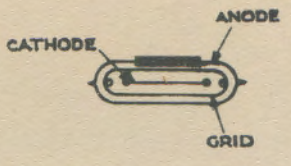

Electrode Spacing.

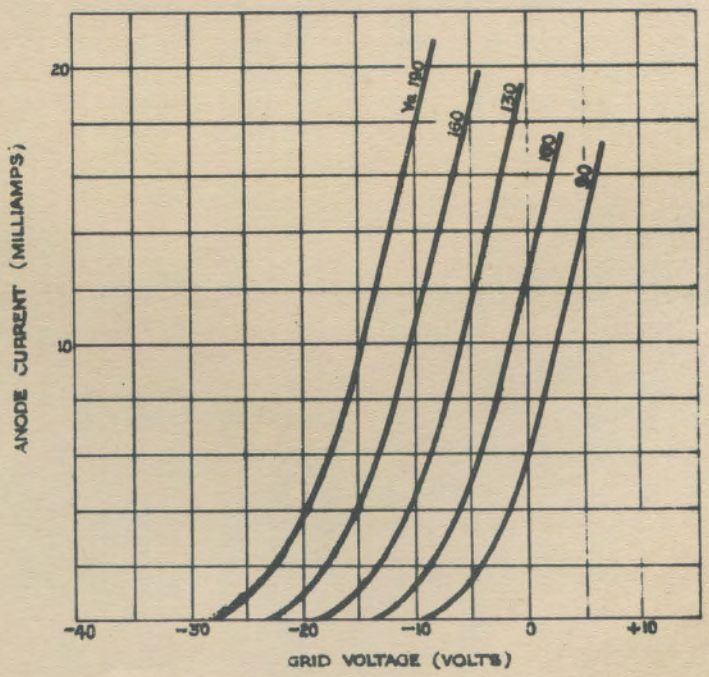

No. 4019 Valve and Curves.

FIG. 15.

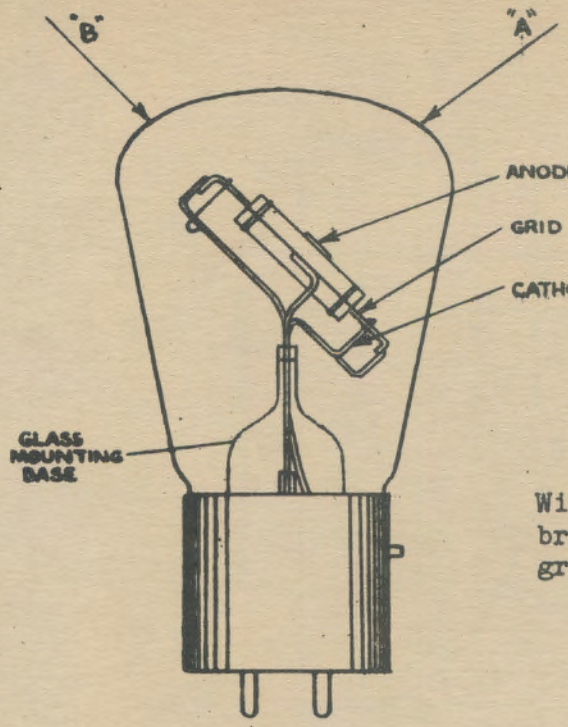

Element Assembly.

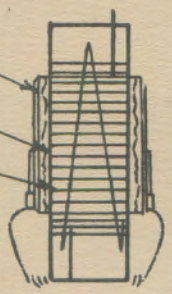

View from "A"

With portion of plate broken away to show grid and filament.

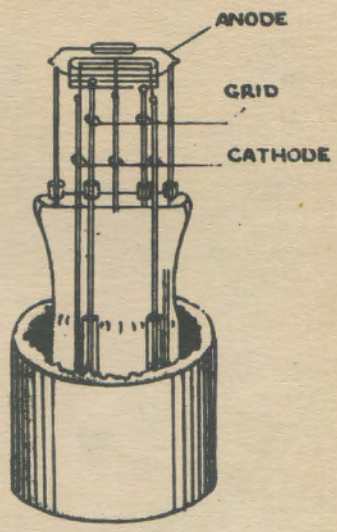

View from "B".

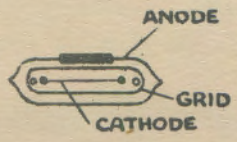

Electrode Spacing.

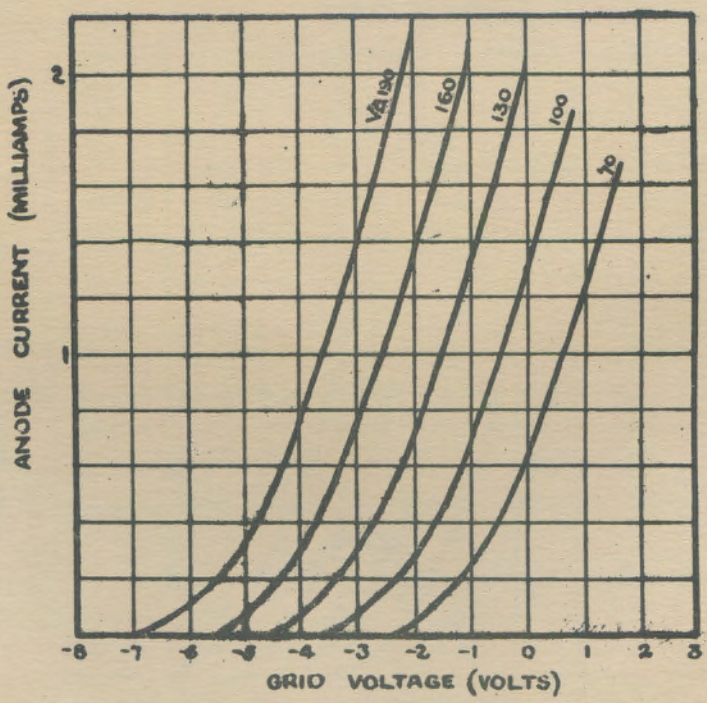

No. 4020 Valve and Curves.

FIG. 16.

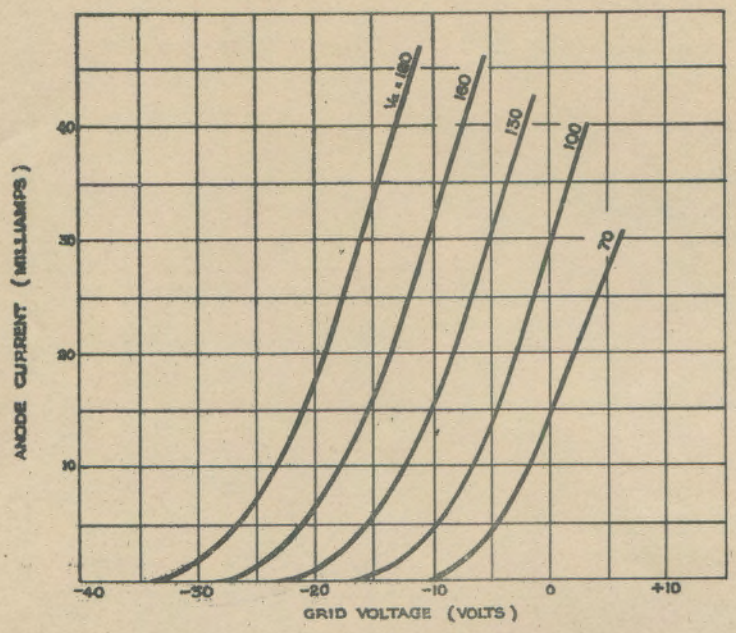

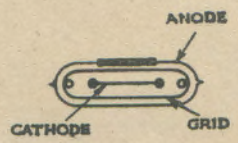

Electrode Spacing

Valve No. 4021 Curves.

Element Assembly is similar to Valve No.4019
See Valve Sections Fig. 15.

FIG. 17.

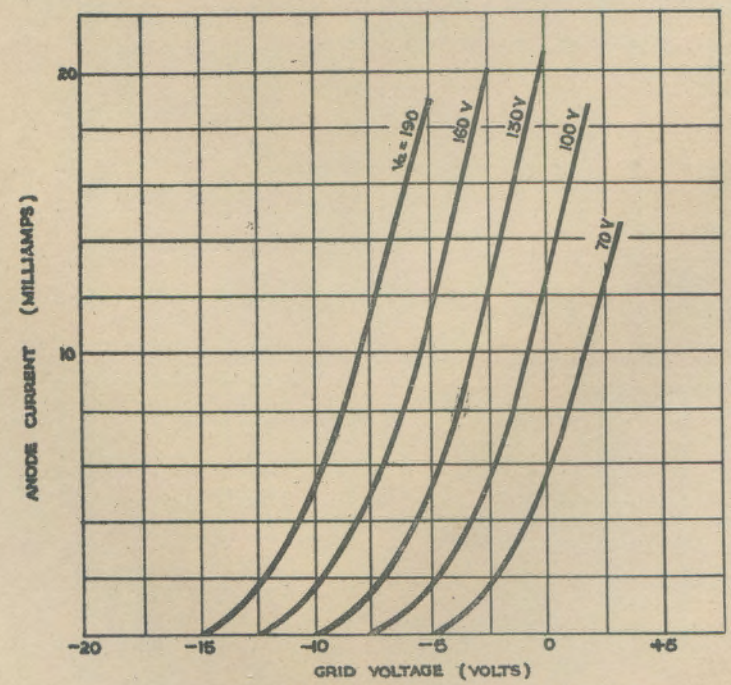

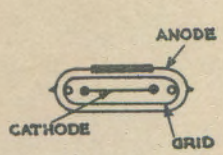

Electrode Spacing

Valve No. 4022 Curves

Element Assembly is similar to Valve No.4019
See Valve Sections Fig. 15.

FIG. 18.

COMMONWEALTH OF AUSTRALIA.

Chief Engineer's Branch,
Postmaster-General's Department,
Treasury Gardens,
Melbourne. C.2.

COURSE OF TECHNICAL INSTRUCTION.

LONG LINE EQUIPMENT.

CONTENTS:

PRACTICAL APPLICATIONS OF THERMIONIC VALVES.

1. THERMIONIC VALVE AMPLIFIERS.

2. THERMIONIC VALVE OSCILLATORS.

3. THERMIONIC VALVE RECTIFIERS.

4. THERMIONIC VALVE MODULATORS.

5 THERMIONIC VALVE DEMODULATORS.

6. THE SELECTION OF A THERMIONIC VALVE.

7. THE OUTPUT IMPEDANCE OF A THERMIONIC VALVE.

8. TEST QUESTIONS.

1. THERMIONIC VALVE AMPLIFIERS.

1.1 The thermionic valve as an amplifier is employed in such devices as voice frequency and carrier telephone repeaters, loud speaking telephones, high impedance monitoring sets etc.

1.2 A typical circuit connection in its simplest form for a thermionic valve when so used is shown in Fig. 1. On the left of this circuit is the input of low energy alternating current. This may be a feeble voice current which it is desired to amplify many times and reproduce without appreciable distortion in the output circuit. The potential impressed

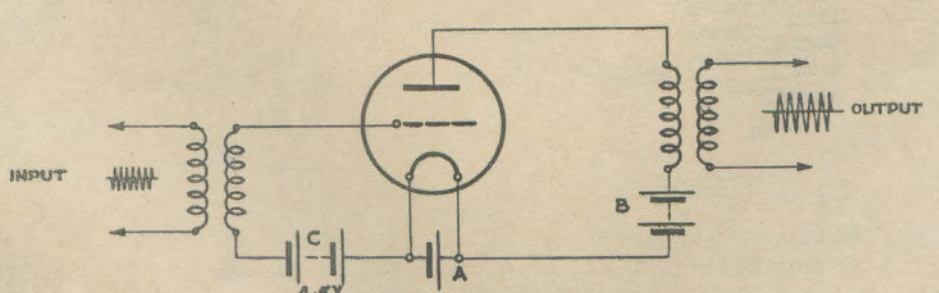

SIMPLE AMPLIFIER

FIG.1

/ on

on the grid of the valve in Fig. 1 will not be the steady one, due entirely to the "C" battery, but an alternating voltage from the secondary of the input transformer superposed on the potential of the 'C' battery. For one half cycle this alternating voltage will add to, and for the other half cycle subtract from, the voltage of the 'C' battery. As shown in Paper No. 1, there is a section on the characteristic curve of a valve (the straight portion) over which the change in anode current is practically directly proportional to the change in grid voltage. If the 'C' battery voltage fixes the point of operation of a valve at the centre of this section, then the alternating current on the grid would, by swinging the grid voltage more + or more -, cause a corresponding rise and fall of anode current about its normal steady value set by the permanent grid bias.

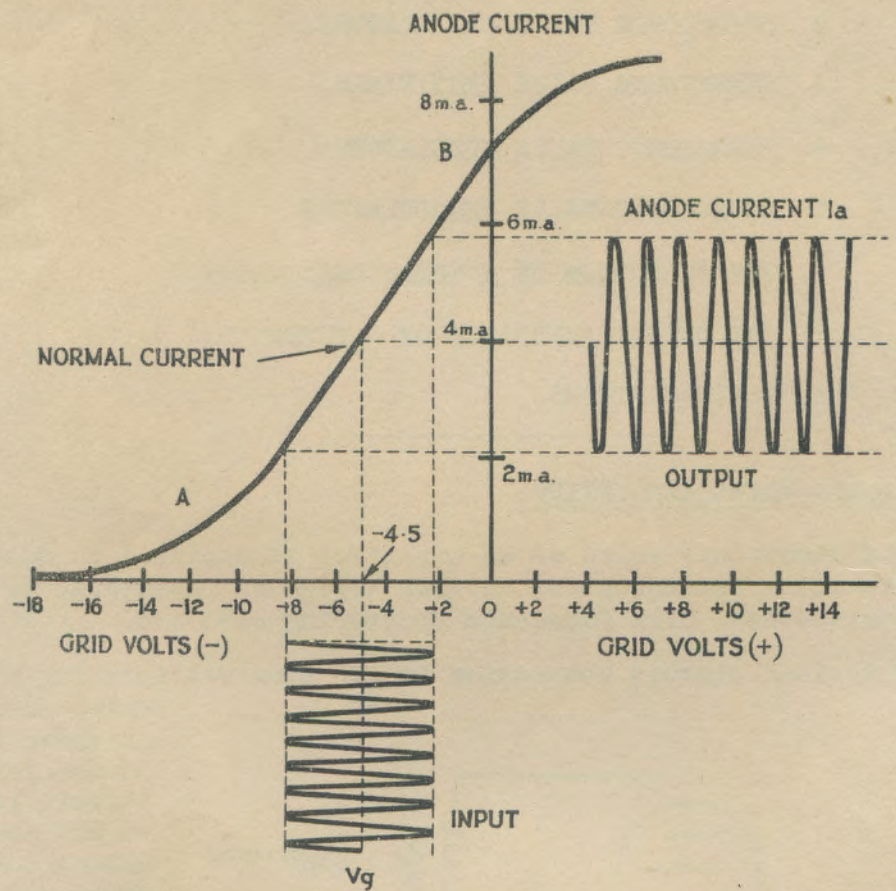

FIG. 2.

Fig. 2 illustrates this action graphically. By means of battery C (Fig. 1) a negative potential of 4.5 volts is applied permanently to the grid. By reference to the characteristic curve (Fig. 2), it will be seen that this, in turn, limits the steady anode current to approximately 4 mA. If, now, the alternating voltage Vg is superimposed on the grid, the point of operation will be shifted to / left

left and right alternately, causing the anode current to correspondingly rise and fall - as shown by the curve Ia - about the 4 mA value. Provided that the grid input voltage Vg does not push the point of operation beyond points A or B, which are the limits of the flat or straight portion of the characteristic curve, the fluctuation of Ia will be a faithful reproduction of the form of Vg as shown. The same applies in the case of an applied voltage of continually varying strength or amplitude, such as a modulated signal. Fig. 3 illustrates such a case.

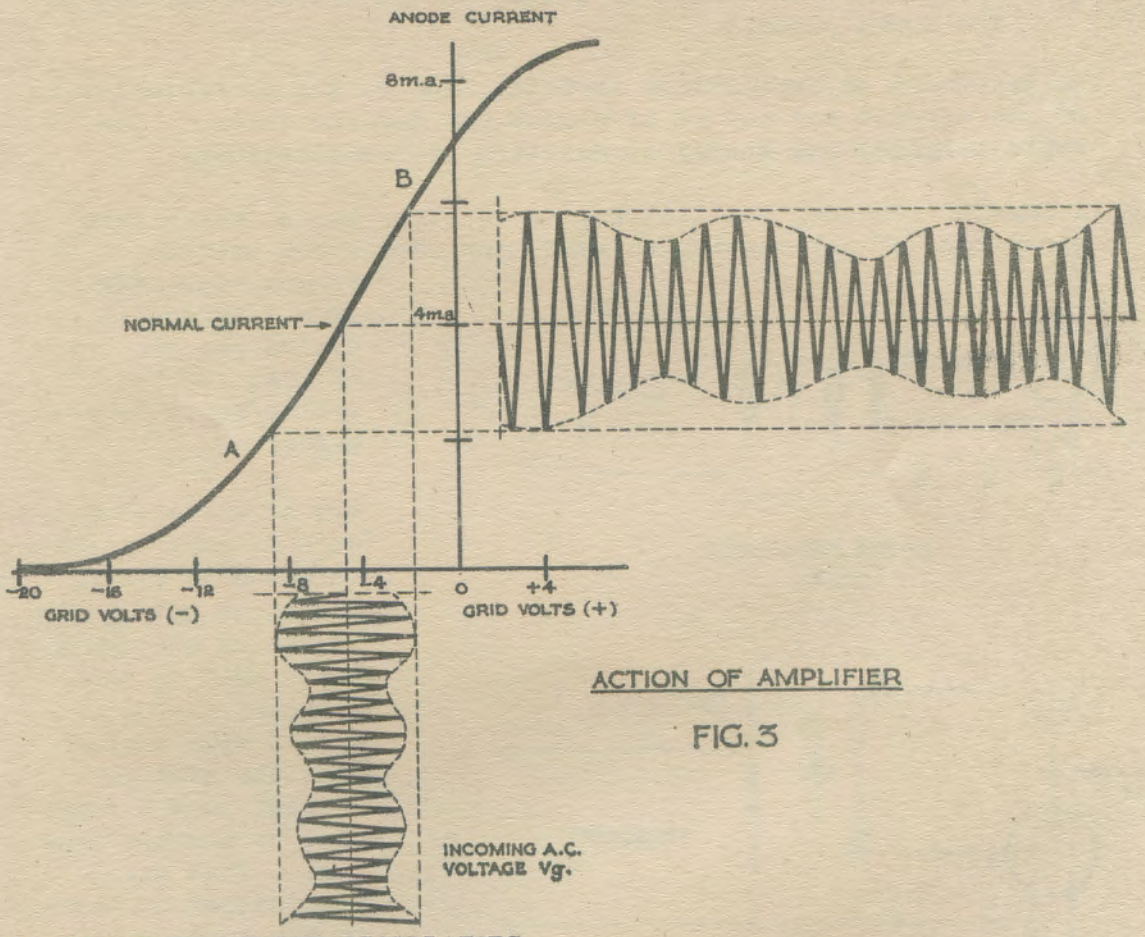

ACTION OF AMPLIFIER

FIG. 3

2. THERMIONIC VALVE OSCILLATORS.

2.1 Any thermionic valve containing a grid can be used as an alternating current generator under the following conditions -

(a) There must be some connection or coupling between the output and input circuit whereby a part of the output energy will be fed back into the input circuit.

(b) The amount of energy that is fed back from the output to the input must be at least as great as the reciprocal of the energy amplification, e.g. if the circuit amplifies the

energy 300 times, at least 1/300th must be fed back into the input circuit.

(c) Either the input or output circuit must have adjusted capacity and inductance to establish resonance, thereby determining the frequency generated.

(d) The current coming from the output circuit and reaching the input circuit through the feedback connection should be "synchronized" (added in phase) to the existing current in the input circuit.

2.2 The frequency of oscillation is determined by the characteristics of the circuit and may be of almost any desired value. The valve supplies the energy to maintain the oscillations.

2.3 In carrier systems, oscillators, or in other words, valve type generators of alternating current, are used which produce frequencies ranging from 6 kC/sec (6,000 cycles per sec.) to 42 kC/s (42,000 cycles/sec.) or even higher.

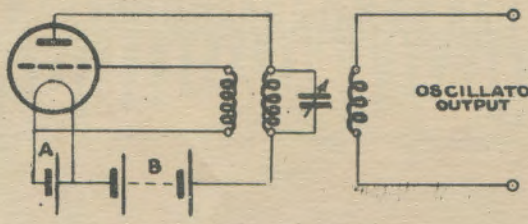

SIMPLE OSCILLATOR.
FIG.4.

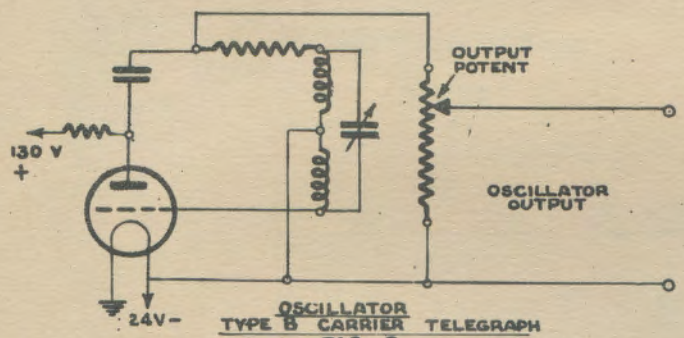

OSCILLATOR TYPE B CARRIER TELEGRAPH
FIG. 5.

2.4 An elementary circuit of an oscillator is shown in Fig. 4. The anode battery is connected through a tuned coil to the anode of the valve, and it will be seen that the grid is coupled to the same coil by another winding. Thus any fluctuation of current in the anode coil causes a corresponding impulse in the grid winding, which impresses a variation of voltage on the grid. This, in turn, again affects the anode current which, in turn, re-affects the grid, so that the interaction between plate and grid sets up a "howling" or, more correctly speaking, an oscillation. The frequency, i.e. the number of reversals per second, is determined by the resonance frequency of the anode circuit which in this case is controlled by the variable condenser across the anode coil. The tertiary (or third) coil serves to supply energy to an external circuit. Once a small change occurs in any part of the circuit the resonant frequency

/ is

is selected and builds up by the feedback to limits imposed by circuit and apparatus characteristics.

2.5 The oscillator may be regarded as a D.C.-A.C. converter, and its action is made possible by the amplifying property of the thermionic valve. As a very small amount of energy needs to be sent back to the grid to maintain oscillation, the unit can be made very efficient with regard to output. Considering this as the amount of A.C. output given for a specified anode power consumption, 50% to 80% or 90% efficiency is possible. Various forms of oscillators are in general use - e.g., the Hartley, Colpitts, Meissner, Tickler Feedback, etc. Further details regarding these various systems can be obtained if desired from standard textbooks. An oscillator following the Hartley principle is used in the telegraph carrier system, and a simplified circuit of this is reproduced in Fig. 5.

2.6 Fig. 6 shows an oscillator of the type used in telephone carrier systems. The frequency is coarsely adjusted by the strapping condensers, the final adjustment of frequency and subsequent routine adjustments being achieved by the air condenser. For suppressed carrier operation, as described later, where the actual carrier itself is not transmitted over the line, the question of frequency adjustment is important as the oscillators used at each end of the line must be of identical frequency.

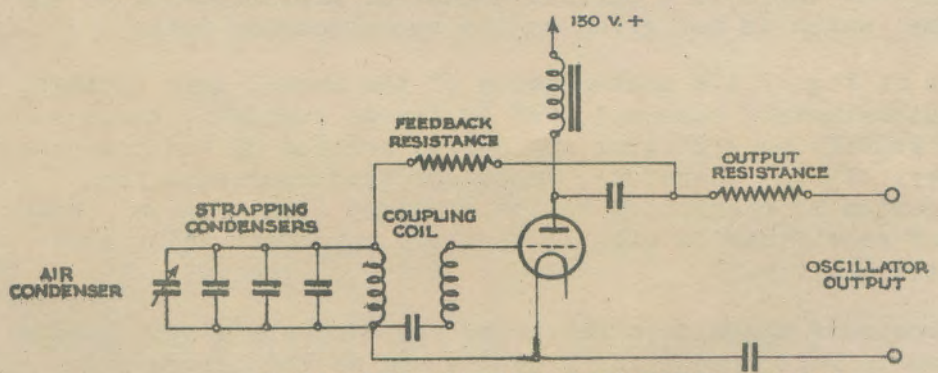

OSCILLATOR CARRIER TELEPHONE SYSTEM
FIG.6

3. THERMIONIC VALVE RECTIFIERS.

3.1 For amplification without distortion, the straight line portion of the characteristic curve must be employed, as shown in Fig. 2. If a curved portion of the curve is used, distortion will result. Within certain limits this can be controlled by the C battery which in Fig. 2 had a value of 4.5 volts. This was a case of the chosen value restricting the amplifying operation to the straight line portion of curve. Consider, on the other hand, an extreme case where the C battery voltage is so great as to give practically zero anode current without a superposed alternating E.M.F. Such a condition is represented by the point P in Fig. 7.

/ If

If, under this condition, an alternating potential is superposed on the grid shown by Curve 2 in Fig. 7, the result would be entirely different. During the first half-cycle, which reaches a peak at point O (Fig. 7), there is not an appreciable effect in the anode circuit, as this half-cycle (projected on the operating curve) falls on the zero line. The other half-cycle, however, subtracts from the 'C' battery voltage on the grid and projects on a portion of the characteristic curve which has appreciable slope, though somewhat curved. This establishes an anode current in the form of unidirectional pulses for each half-cycle of the impressed e.m.f. that subtracts from the C battery voltage. The valve response, in this case, is a rectifying action which is similar to that for which the two-electrode valve is sometimes employed, but there is a certain amount of amplification at the same time, which is not given by the two-electrode tube.

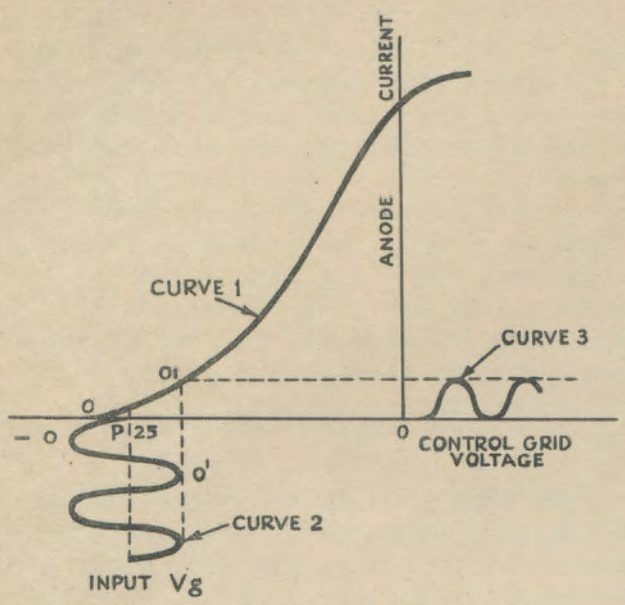

THERMIONIC VALVE AS RECTIFIER.
FIG. 7.

Although in Fig. 7 the chosen value of the normal grid voltage gives approximately zero value of Ia (anode current), there would be some rectifying effect on any curved portion of the characteristic curve. It is, therefore, important that operation for amplification be restricted to the straight line portion, as any degree of rectification will distort the wave form and thereby impair the quality.

Three-electrode thermionic valves so operated are widely used as detectors in radio receiving circuits and as modulators and demodulators in radio and carrier systems. They are also used in various types of measuring apparatus for rectifying small alternating currents to operate direct current meters.

3.2 Rectification of an alternating e.m.f. can be obtained by means of a two-electrode thermionic valve. Valves of this type are commonly used as rectifiers when a considerable power output is desired. In this respect, they function as "converters" of alternating-current to direct-current power. Fig. 8 illustrates schematically two-electrode thermionic valves, as used for both half- and full-wave rectification, together with their associated circuits. In the particular valves illustrated, the cathodes

/ are

are of the filament type and are heated by a low voltage alternating current.

In the half-wave rectifier of Fig. 8 (a), the alternating voltage in the secondary side of the transformer is impressed across the anode and cathode of the tube. The flow of anode current, of course, only occurs during the time the anode is positive with respect to the cathode. This means that, during half of the cycle, there is a current flow between the cathode and anode which gives the effect of closing the circuit or connecting the filter and load to the transformer. During the other half of the cycle (anode is negative with respect to the cathode), there is no anode current and the valve may be considered as opening the circuit. The output current from the half-wave rectifier flows in one direction, but its magnitude varies as the positive half of the impressed wave and is, therefore, of a pulsating character. By adding a filter in the output containing series inductance and shunt capacity, this pulsating current is smoothed out somewhat into a more even direct current.

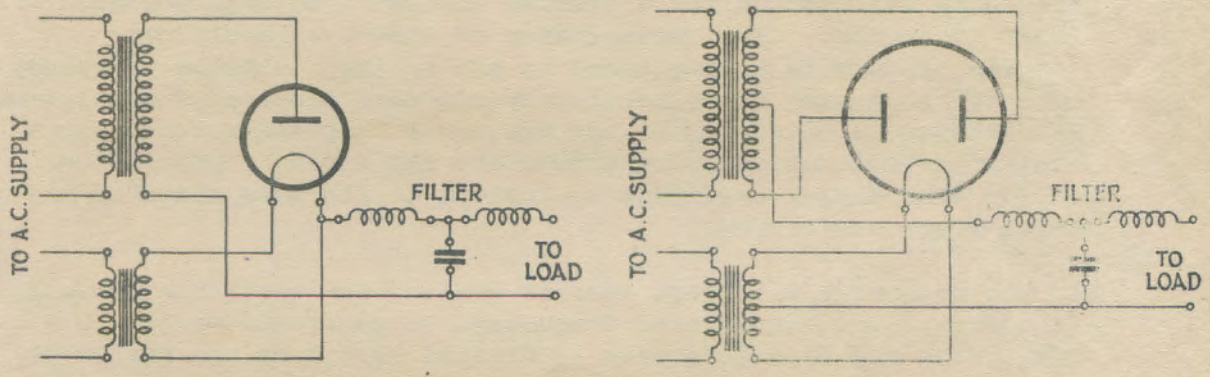

(a) HALF WAVE RECTIFIER (b) FULL WAVE RECTIFIER

FIG. 8

3.3 In the case of the full-wave rectifier of Fig. 8 (b), two separate anodes are used to which are connected the terminals of the transformer secondary winding. It can be seen that there will always be current between the cathode and one of the anodes, because one of the anodes will always be positive with respect to the cathode. This means there will be current flowing in the same direction in the output (filter and load) during both halves of the cycle or full-wave. As the full-wave rectifier uses both halves of the cycle, its power output is approximately twice that of the half-wave rectifier with other factors being equal. This is an elementary case of the use of a multiple valve. This valve could be called a duo-diode valve.

3.4 Very efficient rectifiers may be secured by admitting a small amount of certain gases at controlled pressure into the vacuum of the valve. In this case, the flow of electrons between the cathode and anode ionizes the gas by the electrons colliding

/ with

with the gas molecules. The collision between an electron and a gas molecule knocks some electrons out of the molecule, thereby separating it into a positive ion and one or more negative electrons. The electrons, being negative, are attracted to the positive anode, and the ions being positive travel to the cathode. The positive ions neutralize the negative space charge that would otherwise exist near the cathode, thus greatly facilitating the escape of further electrons. The net result is that the opposition to the anode current flow is reduced, which permits it (anode current) to increase to a value limited only by the external resistance in the anode circuit. In some tubes a mercury gas vapor, supplied by mercury within the valve, is used. Other gases such as argon have also been found to give very satisfactory results.

4. THERMIONIC VALVE MODULATION.

4.1 Modulation is the process of impressing upon a relatively high frequency current (called a carrier current), message currents of lower frequency. The transmission of speech or music over carrier systems is accomplished by subjecting a carrier frequency current, generated by an oscillator, to this process of modulation. The carrier is of a much higher frequency than the voice current and before modulation is of a constant amplitude. Modulation shapes the carrier amplitude to conform to the wave shape of the voice frequency current.

In the case of a telegraph carrier system, the particular channel frequency, i.e. the carrier frequency, is generated by an oscillator and this frequency is divided into dots and dashes by the action of the tongue of a telegraph sending relay (or other device). The oscillator output is normally connected to an amplifier, and the tongue of the relay is arranged to short-circuit the amplifier input intermittently, under the control of the telegraph operator. It is usually arranged that a marking signal from the telegraph operating room is represented by a spurt of carrier frequency to line, i.e. a spurt of oscillator output. In this case the oscillator output - or to use the more general expression, the carrier frequency - is modulated with telegraph signals. Fig. 9 illustrates the modulation of a telegraph carrier current.

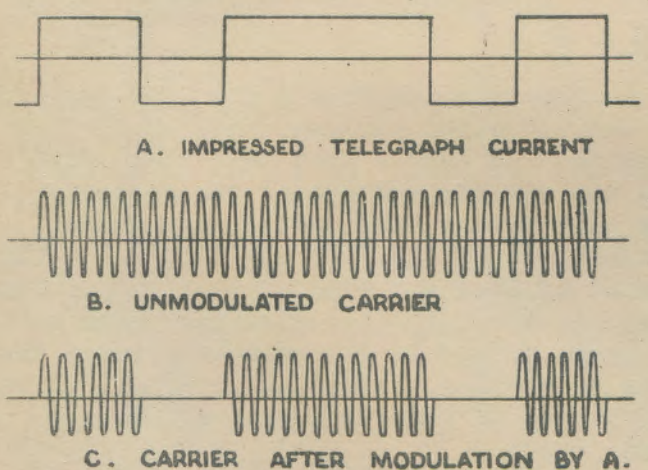

FIG. 9.

/ In

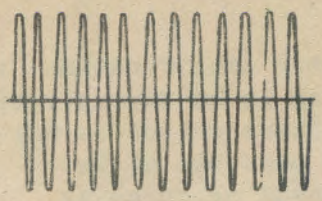

A. UNMODULATED CARRIER CURRENT.

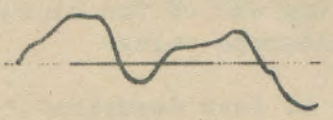

B. VOICE CURRENT

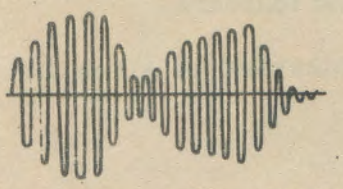

C. CARRIER AFTER MODULATION BY B

MODULATION IN TELEPHONE SYSTEMS.

FIG. 10

In telephony since the variations in voice current are more complex than those of telegraph current, the process is somewhat more involved. Within certain limits, it may be thought of as a process whereby the amplitude of the carrier current is varied to correspond to the variations of the voice currents. This is illustrated in Fig. 10 where A is a representation of the unmodulated carrier current, B represents the voice current and C is the modulated carrier current. It should be noted that the outline or "envelope" of the modulated current has the form of the voice current.

4.2 Thermionic valves are used extensively in carrier telephone modulator circuits. The carrier and voice frequencies are both fed on the grid of the same valve as shown in Fig. 11. If the valve is operating as a straight amplifier, its output would contain the two original frequencies amplified, but as the valve is operated on the non-linear portion, i.e. the curved portion of its characteristic, the output contains numerous other products which include, as well as the two original frequencies, combinations and multiples of both. By means of filters all frequencies not required for transmission are suppressed, so that the only band of frequencies finally allowed to go to line is a band containing either the carrier plus the voice or the carrier minus the voice. This band is called the sideband. On one type of carrier system (the type B system to be described later) the original carrier frequency is also transmitted.

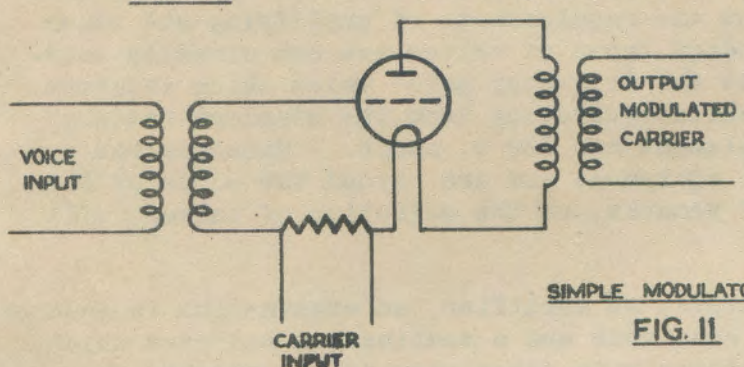

SIMPLE MODULATOR

FIG. 11

5. THERMIONIC VALVE DEMODULATION.

5.1 The demodulator operates in a similar manner to the modulator and its purpose in telephony is to restore or detect from the incoming sideband the original voice frequency.

In telegraph systems the process of demodulation is relatively simple. The modulated telegraph current transmitted over the line consists of spurts of alternating current of the frequency

/ of

of the carrier. This incoming current, after amplification, is led to a thermionic valve, the grid of which is so strongly biassed that it acts as a rectifier. The resultant output is unidirectional varying current. This current consists of two components, a direct current and a superimposed alternating current of the carrier frequency. This alternating current is filtered out, leaving only a series of pulses of direct current, corresponding to those applied at the sending end of the circuit. These pulses are then used to operate a telegraph relay.

In telephone systems, by an action similar to that described for the voice modulator, various products of the two input frequencies are produced, one of which is the original voice frequency. This is filtered out and directed to the switchboard.

5.2 More information about modulators and demodulators is given in paper 7.

6. THE SELECTION OF A THERMIONIC VALVE.

6.1 Whilst the valves used in long line equipment are necessarily limited to a small range of types, it will be realised that since the first development, enormous advances in valve design have taken place and a great many different varieties of valves have been produced to meet the requirements of amplifying and other equipment where standard types of valves are not directly suitable. An example is the "coplanar grid" valve which delivers a very high output whilst operating from the standard battery voltages of 24 V. filament and 130 V. anode. These valves are only used on special equipment and are beyond the scope of this paper. A few brief remarks, on the selection of valves, will be given.

6.2 In designing, for example, an amplifier, an examination is made of the standard valves available and a combination selected which will give, in conjunction with other circuit components, the required amplification, together with the necessary power output. As the final or power valve, because of the electrode spacing and design necessary for power handling, cannot give much gain, the preliminary stages have to provide the necessary voltage amplification and valves having high amplification factors are, therefore, selected.

6.3 Where there is only a low input power level, a valve such as the 102 would normally be used because of its high gain, but for high levels a 101 having less gain but a higher power rating, would be more suitable. This might mean that a further amplification stage, using, say another 101, would need to follow. The voltage amplification of a valve is given by:-

$$\text{Voltage Amplification} = \text{Amp. Fac.} \times \frac{\text{Load Resistance}}{\text{Load Resis.} + \text{Anode Resis.}}$$

/ For

For carrier amplifiers the final power stage would usually consist of a 104 type of valve or, for larger outputs, a combination of 104's as, for example, in the output stage of the transmitting amplifier of a 3-channel carrier system where four 104's are arranged in push-pull parallel. Where a low output will meet requirements a 101 valve will serve in the final stage.

6.4 Output triodes are characterised by their comparatively low A.C. anode resistance. By connecting two valves in parallel this figure is halved and the power output at the same time doubled. A push-pull connection doubles the impedance and nearly doubles the output power. Push-pull operation gives better quality by eliminating the even harmonies. The amplifier output is fed through a transformer designed to match the valve or valves of the last stage to a 600 ohm line. Similarly an input transformer matches a 600 ohm line to the input of the first amplifier stage.

7. OUTPUT IMPEDANCE OF A THERMIONIC VALVE.

7.1 In order that distortion may be kept to a minimum, the load into which the final valve or valves operate is carefully calculated. In general terms, for maximum undistorted output the load impedance of a triode should be approximately twice the impedance of the valve itself.

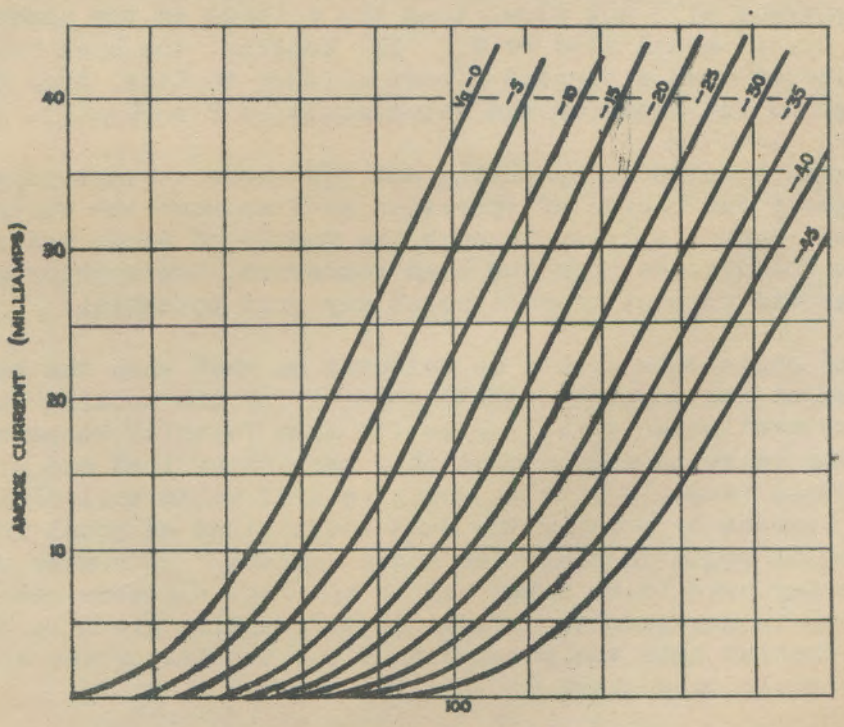

VALVE Nº4104 CURVES
FIG. 12

/ 7.2

7.2 To forecast the actual performance of any valve in a given circuit under operating conditions, curves of anode voltage v. anode current are used, which are characteristic of the particular valve. These curves are somewhat similar to the "mutual" characteristic curve, (i.e. the curve showing anode current plotted against grid volts) which has already been described. A separate curve is drawn for each setting of grid bias voltage. Fig. 12 shows a family of anode current/anode voltage curves with various grid bias voltages, the anode current being shown in milliamps on the vertical ordinate.

7.3 When the approximate load has been determined, a representative straight line is drawn through this family of curves called the "load line", and by making use of the readings taken at intersections with this line an idea as to the power output and distortion content of the amplifier under working conditions can be obtained.

7.4 In briefly describing the load line, perhaps the first point to stress is the fact that an external resistance of any form connected in series with the anode of a valve must have some effect on the anode voltage the moment anode current commences to flow. For example, if a voltage V were applied to the anode of a valve through a resistance R and the valve were biassed to cut off so that current will not flow, then the voltage on the anode of the valve itself would also be V. If, however, the bias voltage were so adjusted that a current I were allowed to flow, then the voltage on the anode of the valve would be $V - (R \times I)$.

7.5 Thus, when a valve is operating and the anode current is varying throughout the period of operation so also must the voltage vary. The load curve is drawn through the family of anode voltage current curves to indicate, for the load concerned, the appropriate plate voltage and current conditions at any grid potential.

7.6 The load resistance should be selected so that when the valve is biassed at its nominal operating point for the working anode voltage available, it will give its most faithful response. When the valve is operated at this particular load and within its grid swing range, a rise in negative grid volts will diminish the anode current by exactly the same amount that an equal fall in grid volts would increase the anode current. A number of load curves may have to be drawn before the most suitable can be selected, but in any case the graphical information given by the load curve enables both the power output and the distortion content to be correctly calculated.

7.7 As already mentioned, the load resistance for maximum power output consistent with undistorted quality, should be twice that of the valve itself. For maximum power output the load should equal the valve impedance. These remarks apply to triodes. A power

/ pentode

pentode, for example, having an A.C. anode resistance of 60,000 ohms would be correctly loaded with approximately 7,000 ohms, if distortion is to be avoided.

7.8 If a pentode load impedance is too high the voltage at the plate is so reduced that a space charge can form at the suppressor, preventing the anode current from responding to the signals on the control grid. This gives rise to distortion. With too small a load resistance, on the other hand, the pentode output falls heavily.

7.9 The foregoing remarks have been confined to the use of thermionic valves for the purpose of amplifying signals.

8. TEST QUESTIONS.

1. Give a simple circuit and describe the operation of a thermionic valve amplifier.

2. Draw a circuit and give a description of one use of the diode thermionic valve.

3. Describe with the aid of a circuit a thermionic valve high frequency oscillator.

4. What is modulation?

END OF PAPER

COMMONWEALTH OF AUSTRALIA.

Chief Engineer's Branch,
Postmaster-General's Department,
Treasury Gardens,
Melbourne. C.2.

COURSE OF TECHNICAL INSTRUCTION.

LONG LINE EQUIPMENT.

CONTENTS:

METAL RECTIFIERS.

1. DESCRIPTION OF METAL RECTIFIERS.

2. METAL RECTIFIER CONVERTERS.

3. THE EFFICIENCY OF METAL RECTIFIER CONVERTERS.

4. THE REGULATION OF METAL RECTIFIER CONVERTERS.

5. THE VOLTAGE DOUBLER CIRCUIT.

6. METAL RECTIFIER MODULATORS AND DEMODULATORS.

7. METAL RECTIFIER VARIABLE ATTENUATOR, STATIC MODULATOR OR RELAY.

8. MISCELLANEOUS APPLICATION OF METAL RECTIFIERS.

9. TEST QUESTIONS.

---

1. DESCRIPTION OF METAL RECTIFIERS.

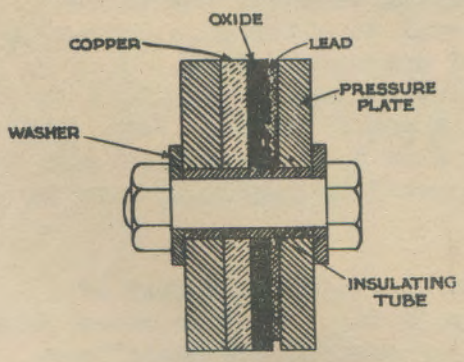

COPPER-OXIDE RECTIFIER

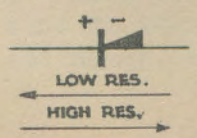

SYMBOL

FIG.1

1.1 Metal rectifiers serve an increasing variety of purposes in telecommunication, such as the charging of batteries, the furnishing of direct power from A.C. mains for special purposes, conversion of D.C. measuring instruments for A.C. use, prevention of acoustic shock to telephone operators, in subscribers' meter circuits, spark quenches, relay slugs, modulators and demodulators in carrier practice, echo suppressors, variable attenuator networks, voltage limiters, polarising and discriminating or A.C. relays, detectors in wireless circuits, test in circuits, all trunks busy circuits, providing speech immunity in voice frequency

/ receivers

receivers, by passing of operated fuses, and in static modulators (which replace sending relays) in telegraph carrier systems. Many other uses have been found for metal rectifiers and they have replaced thermionic valves in many circuits.

1.2 The metal rectifier generally in use here, consists of a disc of pure copper, coated on one side with a thin layer of cuprous oxide. This layer is approximately 1/1000th of an inch thick, and is deposited on the surface of the copper by a series of heat treatments. The oxidised disc has the peculiar property of conducting a current of electricity in the direction of oxide to copper but not in the opposite direction. Perhaps it would be more correct to say that the resistance to a passage of current in the oxide to copper direction is very low, but in the opposite direction very high. A single copper oxide element is shown in Fig. 1, together with the standard symbol.

1.3 Fig. 2 shows the resistance of a copper oxide element to negative and positive voltages. The vertical ordinate of the right-hand curve is drawn on a scale 200 times larger than the vertical ordinate on the left, to illustrate more clearly the lower bend on the curve. It may be seen that to a pressure of 1 volt negative the resistance of the unit is of the order of 4,000 ohms. In some ways this rectifier resistance curve compares with the "anode current v. grid volts" curve of a valve, and it is by making use of the bend in the curve that these rectifiers can be used as modulators and demodulators.

1.4 Owing to the very light film of oxide, and the difficulties of establishing intimacy of contact, the power carrying capacity of rectifier discs is not very great, so that except for very light loads, series parallel groups are used. Rectifier discs are connected in series where a high voltage has to be catered for, and in parallel where the current carrying capacity has to be increased. In practice, it is not usual to allow an alternating voltage of more than 5 to be impressed across any single disc so that a 24 volt application would require at least five discs in series. If, for example, commercial $\frac{3}{4}$ amp discs were used, this combination would give $\frac{3}{4}$ amp from the five discs in series, and to give 3 amps, for example, 20 discs would be required, five in series and four sets in parallel.

1.5 Large power ratings, therefore, will require a large number of copper oxide discs with consequent high cost. In some cases this difficulty is to some extent overcome by running the rectifiers at somewhat higher ratings than the conservative safe standard, and cooling them during operation by means of a fan. Installations of this type, however, would be beyond the scope of this paper, which will be confined mainly to the low capacity units. Other

/ types

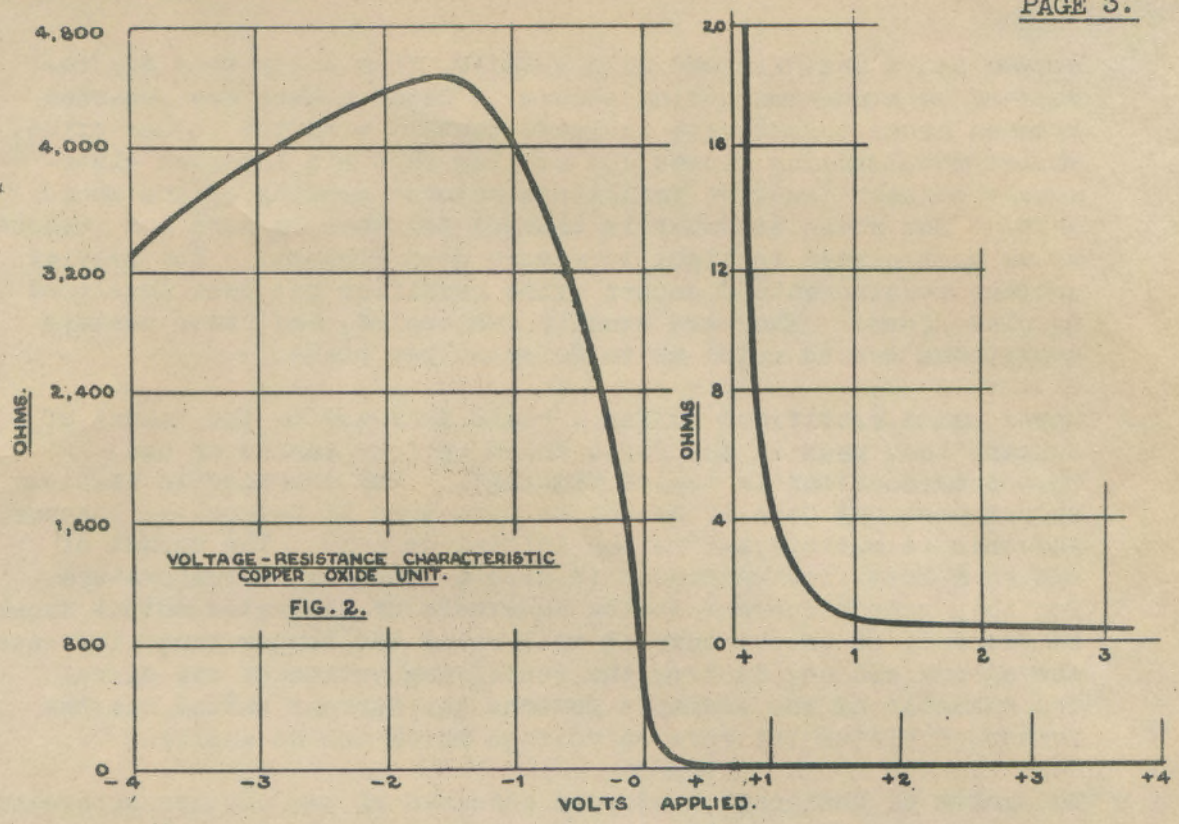

VOLTAGE - RESISTANCE CHARACTERISTIC COPPER OXIDE UNIT.

FIG. 2.

types of A.C. to D.C. rectifiers have been discussed in Paper 9 of Applied Electricity III.

1.6 The mechanical assembly of a copper oxide rectifier unit as used for power rectification is shown in Fig. 3. A number of oxidised

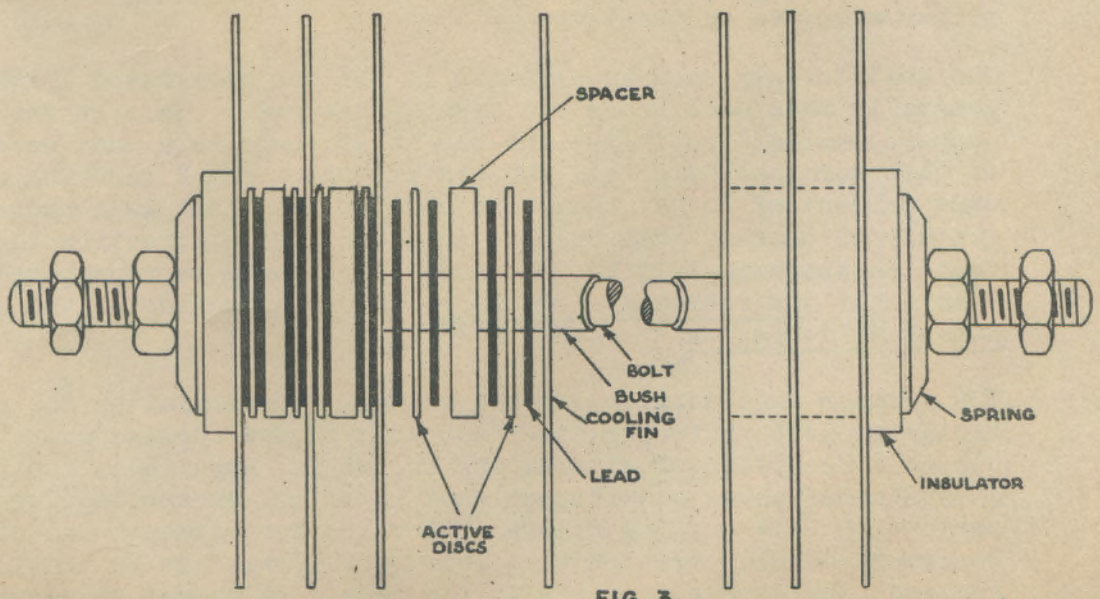

FIG. 3.

/ copper

copper discs are arranged on a spindle, from which they are insulated by a non-conducting sleeve. Lead washers are inserted between discs to preserve intimate contact with the copper oxide, whilst metal spacing pieces and cooling fans are inserted alternately between discs to facilitate natural cooling of the whole unit. The whole assembly is clamped together by nuts and washers, which must always be tight to ensure good contact. For heavier current requirements a copper oxide rectifier has been developed in plate form. They are usually fan cooled, and under certain conditions can be rated up to 20 amps. per plate.

1.7 Copper oxide rectifiers suffer a rapid decrease in the amount of current they pass in the first three or four months of use. This deterioration is called "ageing". The decrease in initial output does not usually amount to more than 25 per cent., however, and this is anticipated in the initial design. The amount of ageing a rectifier undergoes is also a function of temperature. For this reason current drains in excess of the rated output should be avoided, as excess current will raise the temperature, increase the ageing and may destroy the rectifying action of the discs. The diameter of the elements governs the current rating, and the number of plates the reverse voltage which can be applied.

1.8 The system of designation adopted consists of two numbers separated by a bar, the first indicating the number of groups in the unit and the second the number of plates in each group. This number is followed by a suffix letter which serves to indicate the type of disc. For example, a unit designated as 1/12A would mean one unit consisting of 12 "A" type discs. Normally the ends are of opposite polarity, but in certain cases this is departed from and the letter N or P is added to the group number to signify that the rectifier is assembled in such a manner that both ends are either negative or positive.

The unit largely used in circuits is the one designated 1/12A and generally this unit has a red disc at one end. This is the copper terminal (positive) and the negative battery must be connected to this terminal to obtain forward current. When carrying a forward current of 50 mA, the resistance of this unit is approximately 40 ohms. With current in the opposite direction the resistance is approximately 20,000 ohms. It should be remembered, however, that the resistance of the rectifier increases as the applied potential decreases.

The maximum safe working reverse voltage recommended by the manufacturers is 5 volts per disc, but this figure applies only to its use as a rectifier of alternating current. Experience has indicated that where a unidirectional potential is applied for long periods, a safe working figure is 3 volts per element, and circuit designers should remember that where a D.C. voltage is continuously applied, the number of discs in the rectifier should be numerically not less than one-third of the applied potential in volts.

/ Metal

Metal rectifiers may be made from combinations other than that of copper and oxide, and, as a matter of interest, the junction point between any two different conductors gives some degree of rectification when an alternating current is applied.

Another type of metal rectifier frequently used is the Selenium Rectifier, which consists of iron discs coated with selenium.

2. METAL RECTIFIER CONVERTERS.

2.1 The metal rectifier was primarily developed to convert alternating current into direct current, and Fig. 4 shows a circuit arrangement suitable for this conversion. Alternating current is connected to the primary winding of a transformer (see Fig. 4) and stepped up via the secondary winding to the voltage required to give the proper direct current output potential and, at the same time, compensate for losses in the converter. The transformer also performs the function of isolating the alternating current mains from the direct current side of the converter. The transformer output is sent through a rectifying unit which transforms the alternating current into pulsating direct current. The direct current thus produced would not be satisfactory owing to the low frequency hum present, which must be eliminated by a filter circuit consisting of a series choke or inductance and a shunt capacity. The resultant current is approximately normal direct current.

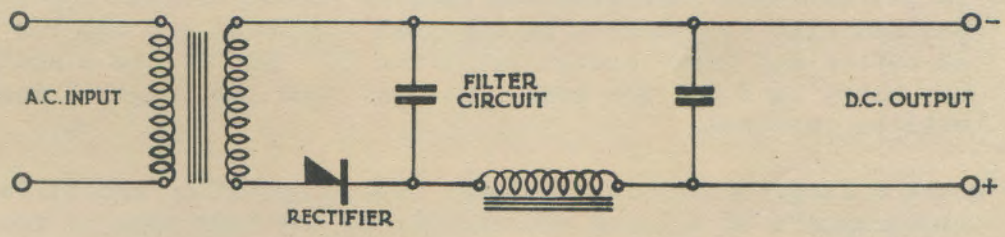

SIMPLE CONVERTER USING HALF-WAVE METAL RECTIFIER AND FILTER CIRCUIT.

FIG. 4.

2.2 Metal rectifiers can be used in circuits to provide either full wave or half-wave rectification. As the term implies, the latter type (which is shown in Fig. 4) makes use of only one-half of the alternating current cycle, the other half being lost. A condenser bridged across the output is discharged during the ineffective half cycle, thus tending to maintain the direct current.

/ 2.3

2.3 Full wave rectification can be obtained by connecting a number of rectifiers in the form of a bridge as shown in Fig. 5. This method is generally adopted with metal rectifiers and has the advantage that the voltage across the secondary of the transformer is approximately only half that necessary for the split transformer connection shown in Fig. 8 of Paper 2.

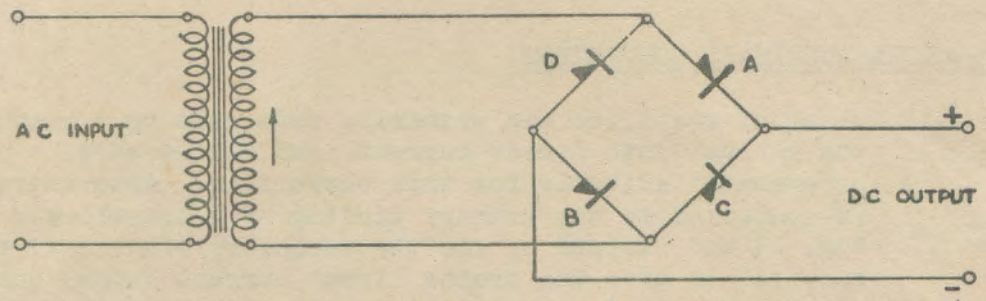

Full Wave Metal Rectifier (Bridge Connection).

FIG. 5.

2.4 The action of the Bridge Rectifier may be seen from the diagram. A positive pulse from the line transformer in the direction of the arrow passes through rectifier A, through the load, and back to the transformer via rectifier B. This pulse is in the copper to oxide direction in rectifiers C and D which therefore block the current flow. On the next half cycle a pulse takes place in the opposite direction and readily passes through Rectifier C, (maintaining the correct polarity at the load) through the load as before and back through rectifier D. Rectifiers A and B are now blocking until the next reversal, when the original condition will be restored.

2.5 Where a large output is necessary from a rectifier and strict requirements of silence are specified, the best type of rectifier is the 3-phase full-wave rectifier using copper oxide discs as shown in Fig. 6.

2.6 Fig. 7 attached, is a simplified circuit of a rectifier used to supply anode and cathode (filament) currents to a Type D carrier system. It will be noted that there are transformer taps on both the primary and secondary sides. These allow for independent regulation of the outputs; if, for instance, the 24 volts output is high, or the 130 volts output low, such a condition could not be overcome by altering the primary taps only. Should the variation of anode and cathode voltages go beyond the range of the secondary taps, further adjustment is possible by the insertion of suitable chokes between the secondary output and the rectifier elements. In some cases, after a rectifier has been in service for some time, a falling-off of output has been noticed and the transformer tappings give a means for restoring the

/ original

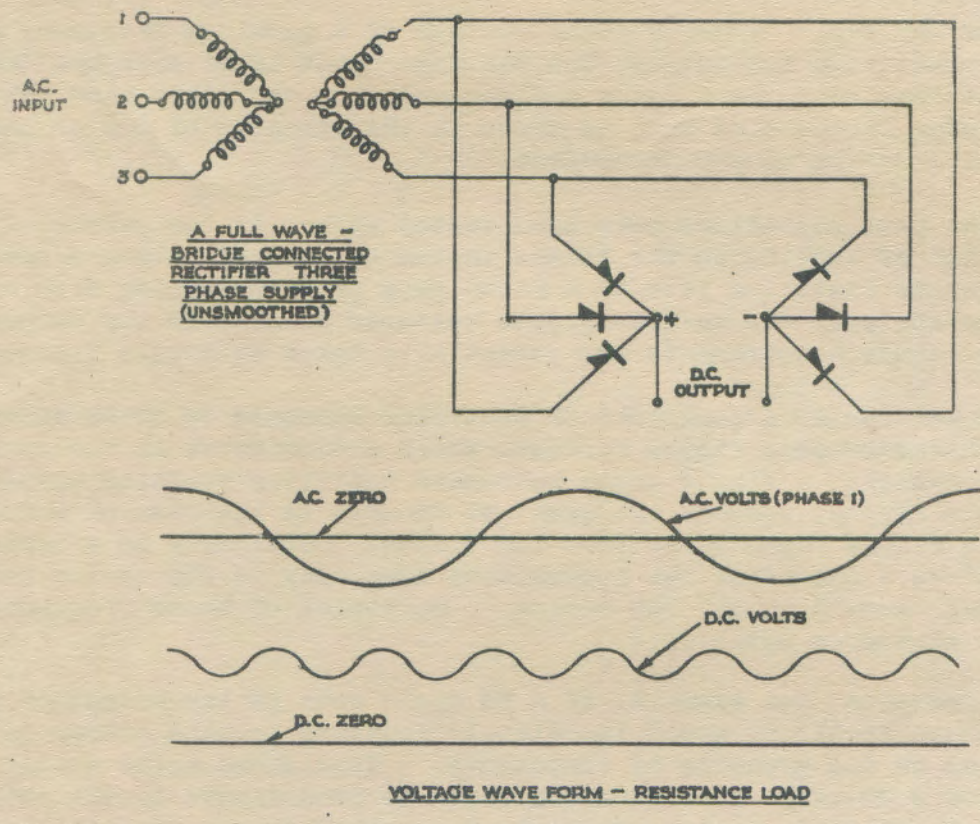

FIG. 6

original output. The rectifier unit shown as the B 4.6.2. rectifier unit is a bridge arrangement with rectifiers in parallel on each arm.

3. THE EFFICIENCY OF THE METAL RECTIFIER CONVERTER.

3.1 Assuming the efficiency of a metal rectifier converter to represent the ratio of the D.C. watts output compared to the watts input measured on a wattmeter, the efficiency would be of the order of about 50% to 60% without smoothing. Whilst other rectifiers give a higher efficiency than this, metal rectifiers have the advantage of low maintenance and no risk of glass breakages.

3.2 In Long Line telephone plant electrical silence is important and, as more and more use is being made of mains operated equipment, fairly strict requirements for purity of output have to be specified. In many cases it is necessary to specify a total ripple voltage in the output of the rectifier of less than 0.1%. The tendency overseas is to specify a certain total noise voltage, to be measured with a special instrument which discriminates against different frequencies according to their disturbing effect

/ upon

upon the ear. Thus, a large voltage of a harmless frequency might be present in the output, but the instrument is so arranged that this does not give a large deflection. On the other hand, disturbing frequencies such as those in the vicinity of 800 or 1000 cycles are in no way attenuated.

3.3 In the past rectifiers have been tested either by the simple method of amplifying the noises in the output and making a comparative listening test at a known gain or by measuring with a wave analyser the various ripple voltages present in the output. The latter measurements are essentially taken at single frequencies.

3.4 Each particular arrangement of rectifier elements is accompanied by a characteristic ripple voltage, which predominates in the output. For example, a single phase half-wave rectifier contains mostly 50 cycle ripple, whereas the greatest trouble in the case of a full wave single phase comes from 100 cycles. Similarly in a 3-phase half-wave rectifier the predominant frequency is 150 cycles and in a full-wave 3-phase, 300 cycles. Multiples of these frequencies are also more noticeable.

3.5 The presence, for example, of a 50 cycle note in the output of the 3-phase rectifier would immediately indicate trouble either in the mains or the grouping of components. Unbalanced mains would allow a 50-cycle note from one phase to predominate in the output due to slightly higher amplitude than other phases, but the more likely cause would be due to bad screening or an ineffective arrangement of transformer cores to avoid inductive pick-ups. This trouble would be more noticeable where a separate transformer is used for each phase.

3.6 Where only partly smoothed rectifiers are used for charging batteries, and where the currents are fairly heavy, it has been found necessary to arrange the battery leads and the cells themselves in the form of a loop-- otherwise inductive coupling takes place between the charging leads of one battery and the discharge circuits of the other. This requirement is particularly evident where high gain amplifiers are operated from the batteries concerned.

4. THE REGULATION OF METAL RECTIFIER CONVERTERS.

4.1 The output regulation of metal rectifiers is not of a high order, and a comparatively wide range of output voltage has to be expected when the load is varied, say from a quarter to full load. To overcome this difficulty it is frequently the practice to connect a bleeder ballast resistance permanently across the output of the rectifier. Some commercial rectifiers supplied with carrier systems include special carbon pile voltage regulating devices, together with an automatic relay which brings in an artificial load should the normal drain be unexpectedly reduced. These

/ extra

extra devices are an added refinement and ensure the best regulation of the output. They cannot, of course, be provided without consumption of power, thus lowering the efficiency of the rectifier unit.

4.2 Rectifiers are usually arranged for operation over a range of supply voltages, suitable taps being provided on the line transformer. A rectifier can thus be operated from a mains voltage between, say 200 and 250, by connecting to the appropriate taps without alteration to the rectifier proper.

5. THE VOLTAGE DOUBLER CIRCUIT.

5.1 An interesting application of the metal rectifier is in the voltage doubler circuit shown in Fig. 8. This apparatus provides the means of not only rectifying the input alternating current but also doubles the output voltage available. The use of the voltage doubler is limited to circuits requiring small currents, say not greater than 150 to 200 milliamps, owing to the fact that paper or mica condensers have to be used, and these units would become of considerable size if a large quantity of electricity had to be stored. For each half cycle of alternating current one of the two metal rectifiers is in the conducting condition and will permit its associated condenser to be charged. Thus, when the half cycle of current is in the direction indicated by the full line arrow in Fig. 8, rectifier A will pass current in this direction and current will flow to charge the condenser A to the voltage of the applied e.m.f. With the reversal of direction of current flow at the next half cycle, as shown by the broken line arrow, rectifier B is conducting and condenser B is charged also to the voltage of the applied e.m.f. The two condensers discharge in series through the load, and as each is charged to the potential of the applied e.m.f. the sum of their voltages (or double the applied voltage) is available to provide a current flow through the load. Thus,

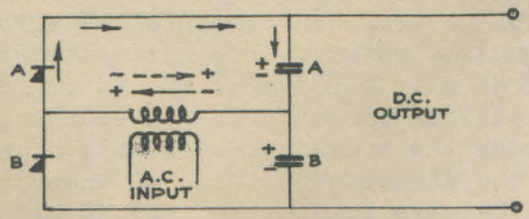

VOLTAGE DOUBLER CIRCUIT.

FIG. 8.

/ the

the output voltage is doubled. This scheme has the advantage that a high voltage is not impressed across the transformer winding.

5.2 A smooth output is obtained from the voltage doubler circuit, and for this reason voltage doubler rectifiers are used to supply anode currents to valves used in amplifiers, studio equipment, etc. Fig. 9 gives a graphical representation of the ripple waves present in different parts of two types of anode rectifier. The top diagram is the conventional full wave thermionic valve rectifier, whilst the bottom diagram is a voltage doubler circuit. The relative amount of noise which would be present in the outputs of these rectifiers can be gauged from the amplitude shown on the wave diagram.

5.3 Where a larger output is necessary than that obtainable from a voltage doubler with the strict requirements of silence, the three phase full wave rectifier shown in Fig. 6 of this paper is used.

6. METAL RECTIFIER MODULATORS AND DEMODULATORS.

6.1 In most of the recent carrier systems, modulation and demodulation (definitions of which were given in Paper 2) are effected by means of metal rectifier units connected in special circuits. Units of the copper-oxide type are used mostly, but several of the later systems are equipped with "selenium" units. The effect of both types on electric currents is similar and the term "metal rectifier" may therefore refer to either. When used as a modulator, metal rectifiers replace the thermionic valves, but usually owing to the low input level which can be accepted, they are followed by an amplifier. This, of course, is a thermionic valve circuit but as the amplifier is usually provided in any case, there is no economical disadvantage. Metal rectifiers used in modulator and demodulator circuits are discussed in Paper 7.

7. METAL RECTIFIER VARIABLE ATTENUATOR, STATIC MODULATOR OR RELAY.

7.1 An interesting application of the metal rectifier is in the variable attenuator network or static modulator used in the voice frequency telegraph carrier system. The principle of the variable attenuator network can be explained with the help of Fig. 10. The complete network, comprising transformer T1, rectifiers R1 and R2 and transformer T2, is connected in series with the A.C. circuit under control. A source of direct current is introduced across the condenser at points C and D. If the current flows in the direction C to D, as shown by the arrow, then rectifier R1 becomes conductive, and R2 blocking, so that the series loss is reduced and the shunt loss increased or, in other words, the attenuation from A to B is made low. If now the D.C. voltage be reversed, R1 becomes blocking and R2 conductive. The series resistance being greatly increased and the shunt greatly reduced, the attenuation is raised considerably.

/ Fig. 9

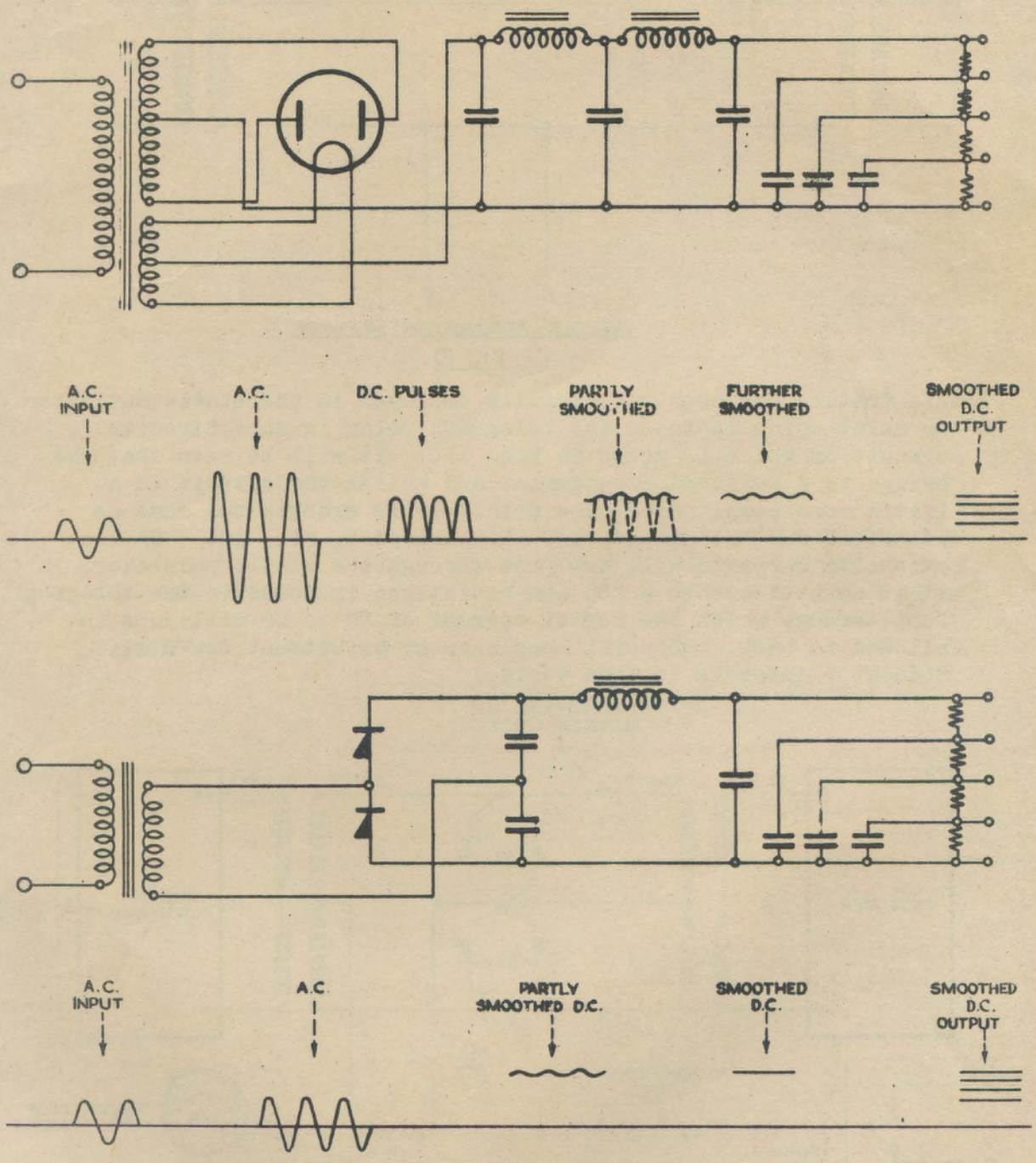

COMPARISON OF SMOOTHING REQUIREMENTS OF THERMONIC VALVE RECTIFIER AND VOLTAGE DOUBLER

FIG. 9

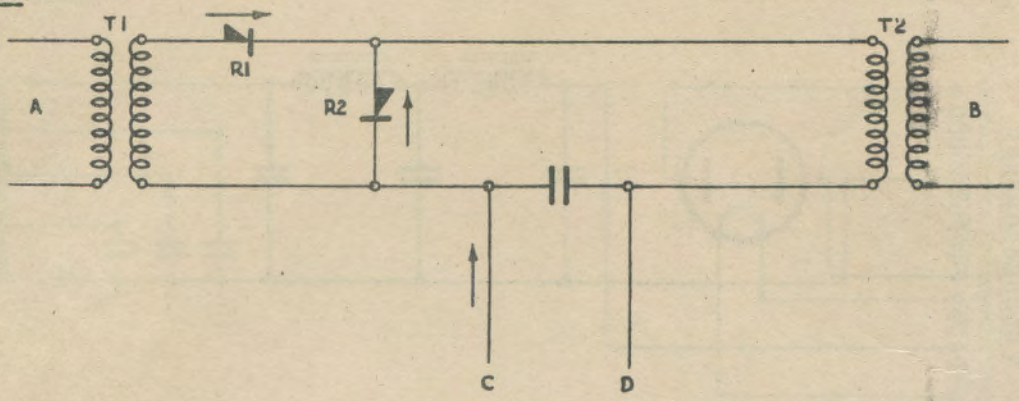

VARIABLE ATTENUATION NETWORK

FIG. 10

7.2 This feature has been successfully employed in the static modulator or relay which replaces the telegraph relay in some circuits, a circuit of which is given in Fig. 11. It will be seen that the bridge is a balanced arrangement and whilst the circuit is a little more complicated, the principle is exactly the same as described for the simple case illustrated by Fig. 10. So that excessive currents will not pass through the static modulator, it is shunted across a 250 ohm resistance included in the telegraph loop through which the normal current of 25 to 30 milliamps is allowed to pass. Special loop current adjustment for static modulator channels is thus avoided.

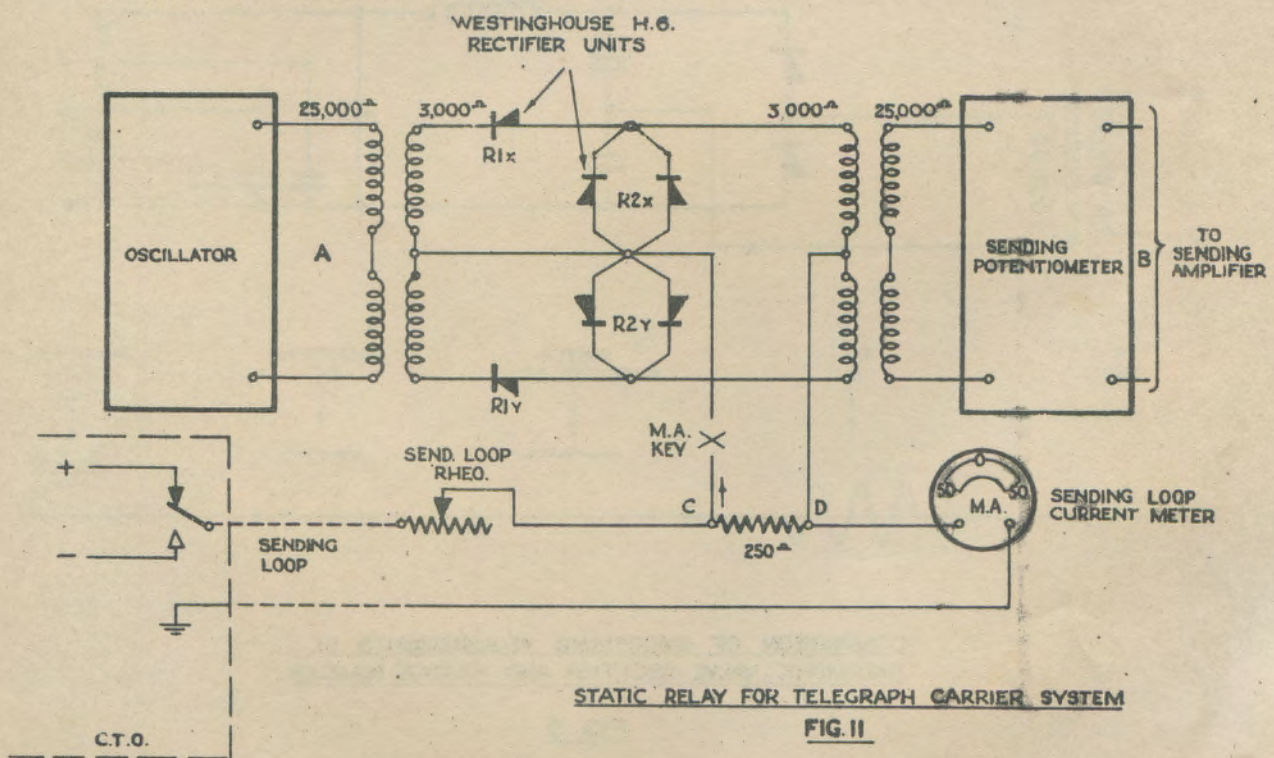

STATIC RELAY FOR TELEGRAPH CARRIER SYSTEM

FIG. 11

/ 7.3

7.3 The terminals of this resistance correspond to points C and D in Figure 10. Rectifier R1 has been replaced by rectifiers R1X and R1Y. Rectifier 2 has been replaced by R2X and R2Y. It will be noted that two metal rectifiers are connected in parallel to form each of the latter. This increases the current carrying capacity of the rectifiers.

7.4 As a matter of interest the group actually consists of a rectifier element of six discs in series and ten in parallel, across each half of the circuit. One method of modulating a telegraph carrier is to short circuit the output from the oscillator to the sending amplifier by the tongue of a telegraph relay. From examination of the circuit of the static modulator in Fig. 11 it may be seen that the same effect is gained by the variable attenuator, the only difference being that instead of the carrier being completely cut off by a "spacing" signal, it is greatly reduced in volume.

7.5 The variable attenuator, similar to that just described, is also used in echo-suppressors where the voice of a subscriber talking from say A to B is rectified and the D.C. so produced used to polarize a variable network which suppresses the voice of the talker in the other direction. This facility is necessary on long circuits where singing round has to be prevented.

8. MISCELLANEOUS APPLICATIONS OF METAL RECTIFIERS.

8.1 Copper oxide rectifiers of very small mechanical dimensions connected in bridge formation have been developed for inclusion in sensitive micro-ammeters for use as high frequency measuring instruments. (See Applied Electricity III, Paper 10.) Transmission measuring equipment now makes considerable use of copper oxide rectifiers.

8.2 A further use of the copper oxide unit is as a volume limiter. Certain peaks in speech have been found to overload repeaters, modulators, and other equipment. To overcome this trouble, rectifiers have been connected with a transformer and bias battery in the manner shown in Paper 7.

8.3 A variation of this arrangement is used across telephonists' receivers to overcome acoustic shock. Similar facilities for voltage limiting can be obtained by the use of a transformer, as described above, but instead of having a copper oxide rectifier across the secondary, a neon lamp is substituted. When the impressed voltage is sufficient to operate the neon lamp, the shunt resistance is reduced in much the same manner as in the metal rectifier voltage limiter.

9. TEST QUESTIONS.

1. What would you consider to be the advantages and disadvantages of operating carrier equipment directly from the A.C. mains?

2. What are the outstanding features of the metal type of rectifier? Where would it be preferable to a rotary type of converter?

3. Describe the operation of (a) the voltage doubler rectifier, and (b) the bridge type rectifier. Are they half wave or full wave?

4. Assuming rectifier discs with a current capacity of 3/4 ampere and an individual voltage of 4, how many discs would be required in all, to supply 40 volts 3 amps. in -

   (a) a single phase half wave rectifier;
   (b) a single phase bridge rectifier;
   (c) a 3 phase full wave rectifier?

5. Which types of rectifier circuit are best for electrically silent operation?
   What factors would determine your selection?

6. If you were designing a rectifier, to supply anode and cathode current to a repeater, for example, what transformer taps would you specify and why?

7. What are the applications of metal rectifiers in long line equipment?

8. Describe the static modulator used in carrier Telegraph Systems. Illustrate with circuit and wave diagram. Why is the D.C. circuit shunted by a resistance included in the telegraph loop?

9. How would you convert a D.C. microammeter to read A.C.? What rectifier connection would you use? Draw a diagram of the arrangement.

END OF PAPER.

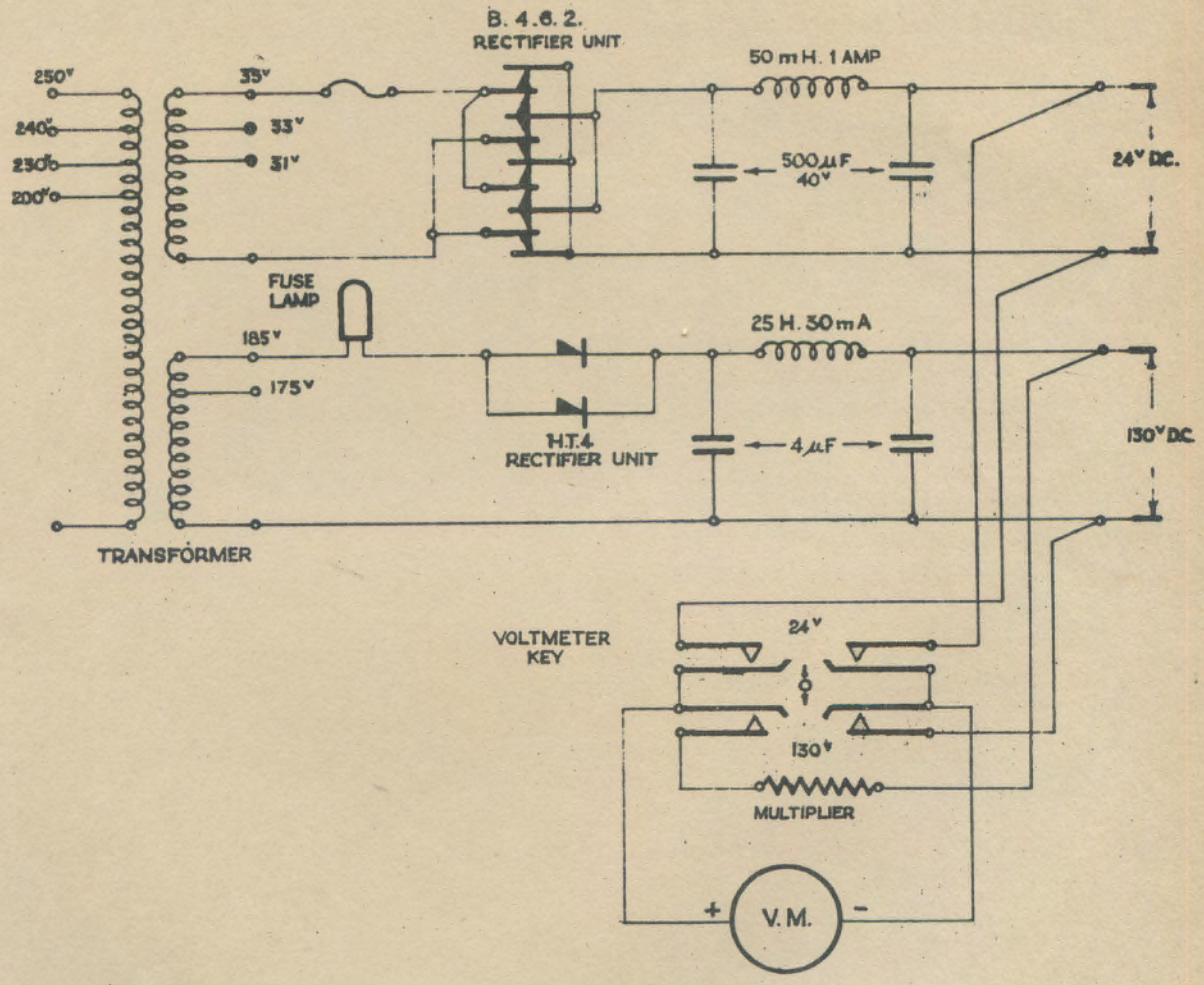

Power Converter - Used to Supply Anode and Filament Current to Type "D" Carrier Terminal.

FIG. 7.

COMMONWEALTH OF AUSTRALIA.

Chief Engineer's Branch,
Postmaster-General's Department,
Treasury Gardens,
Melbourne. C.2.

COURSE OF TECHNICAL INSTRUCTION.

LONG LINE EQUIPMENT.

CONTENTS:

1. WAVE FILTERS - GENERAL.

2. GENERAL THEORY OF FILTERS.

3. EXAMPLES OF FILTERS.

4. CRYSTAL FILTER.

5. TEST QUESTIONS

1. WAVE FILTERS - GENERAL.

1.1 It is a characteristic of communication signals that their transmission requires the use of a continuous band of frequencies; the width of the band depending on the type of signals to be transmitted, (e.g. for transmission of commercial speech a band of frequencies from 200 to 2,600 cycles (approximately) is necessary, while for high quality music transmission a much wider band is required).

1.2 Where, as in the case of carrier telephony, it is desired to transmit simultaneously two or more telephonic frequency bands over the same wires, discriminating means are required to make the transmission of a particular communication channel efficient to that band of frequencies desired, while rendering the circuit highly inefficient at other frequencies, i.e. networks are required which will pass freely the desired bands of frequencies, while highly attenuating neighbouring undesired bands of frequencies, and it is this function which the wave filter serves.

1.3 A Wave Filter may be defined as a network made up of capacities and inductances designed to allow current components at selected frequencies to pass freely and to prevent the passage of other frequency components by introducing excessive attenuation. Wave filters may be classified according to their attenuation frequency characteristic as follows:-

(1) Low Pass Wave-Filter.
(2) High Pass Wave-Filter.

/ (3)

(3) Band Pass Wave-Filter.
(4) Band Elimination Filter.

1.4 A Low Pass Filter is a structure which readily passes currents of all frequencies up to a certain frequency (called the cut off frequency) and which effectually bars currents of all other frequencies.

1.5 A High Pass Filter is a structure which readily passes currents of all frequencies from infinity down to a certain frequency (called the cut off frequency), and effectually bars currents of all lower frequencies.

1.6 A Band Pass Filter is a structure which readily passes band currents that lie between two cut off frequencies (f_1 and f_2) and effectually bars currents of all frequencies outside this range.

1.7 A Band Elimination Filter is a structure which effectually bars currents that lie between two cut off frequencies (f_1 and f_2) and readily passes currents of all frequencies outside of this range.

As it is impossible in practice to construct inductances and condensers which are entirely non resistive, there will always be a slight amount of attenuation in the transmission band of a filter. In general the loss in the transmission band will not exceed 0.5 db., except in the neighbourhood of the cut off frequency where the effect of the resistance is to cause a rounding off of the attenuation frequency characteristic. Theoretical and actual characteristics for low pass, high pass, band pass and band elimination filters are shown in the curves of Figures 1, 2, 3 and 4.

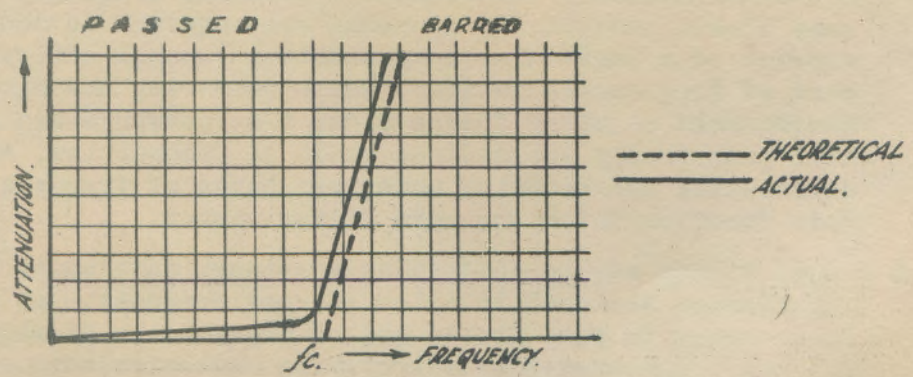

Fig. 1 - Attenuation-frequency characteristic of Low Pass Filter.

Fig. 2 /

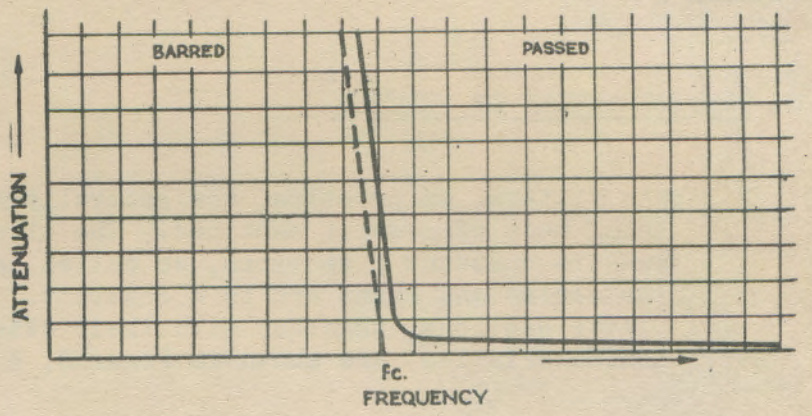

ATTENUATION-FREQUENCY CHARACTERISTIC OF HIGH PASS FILTER.
FIG. 2.

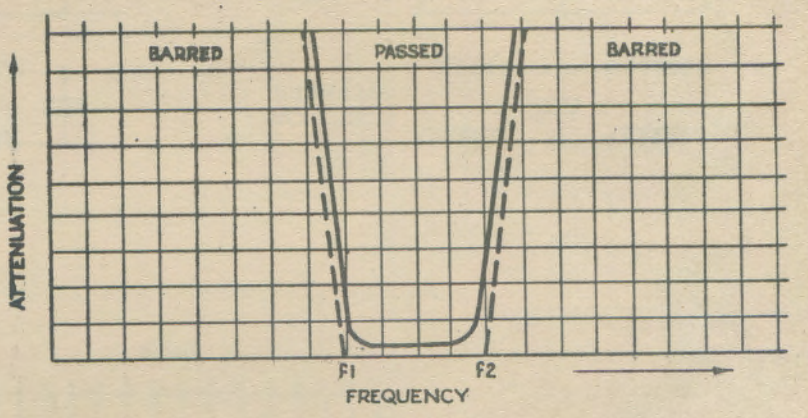

ATTENUATION-FREQUENCY CHARACTERISTIC OF BAND PASS FILTER.
FIG. 3.

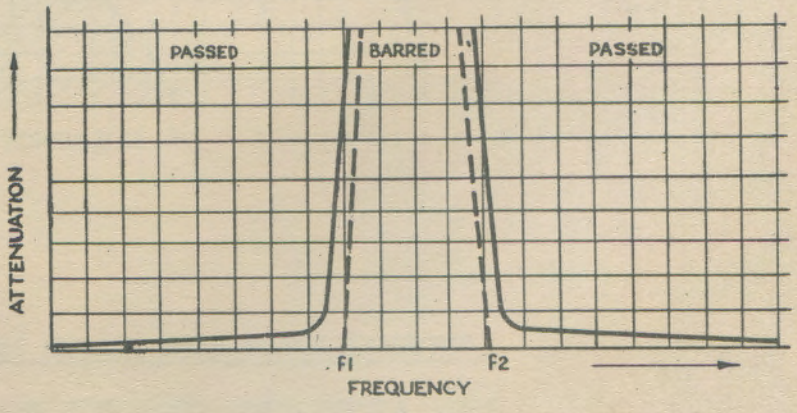

ATTENUATION-FREQUENCY CHARACTERISTIC OF BAND ELIMINATION FILTER.
FIG. 4.

2. GENERAL THEORY OF FILTERS.

2.1 Wave filters, in practice, are generally composite in nature, being made of several sections. The simplest types of sections are the constant K sections, so called because the product of the series and shunt arm is a constant. Examples of constant K filter sections, together with their attenuation frequency characteristics, are shown in Figs. 5, 6, 7 and 8.

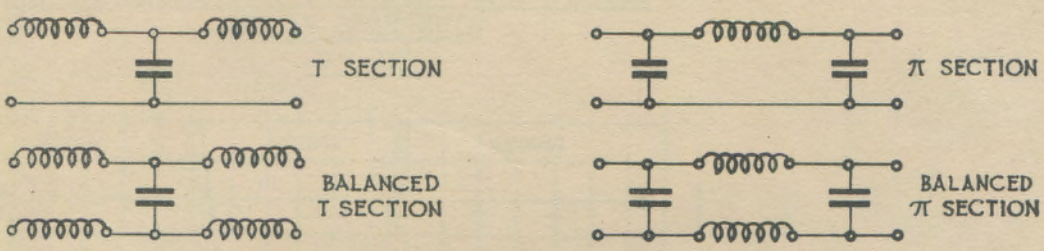

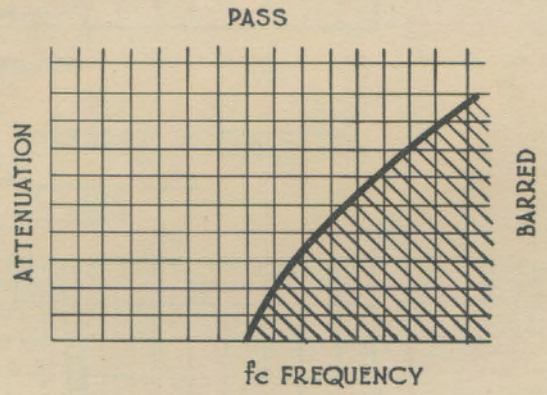

CONSTANT K LOW PASS FILTER SECTION WITH

IDEAL ATTENUATION FREQUENCY CHARACTERISTIC.

FIG. 5.

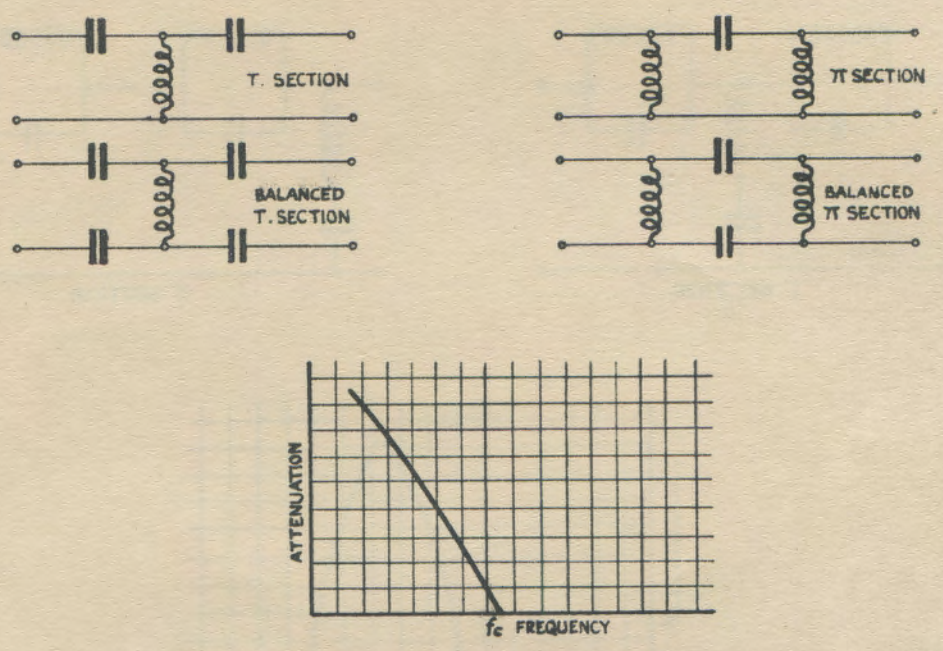

Fig. 6. - Constant K High Pass Filter Section with ideal attenuation frequency characteristic.

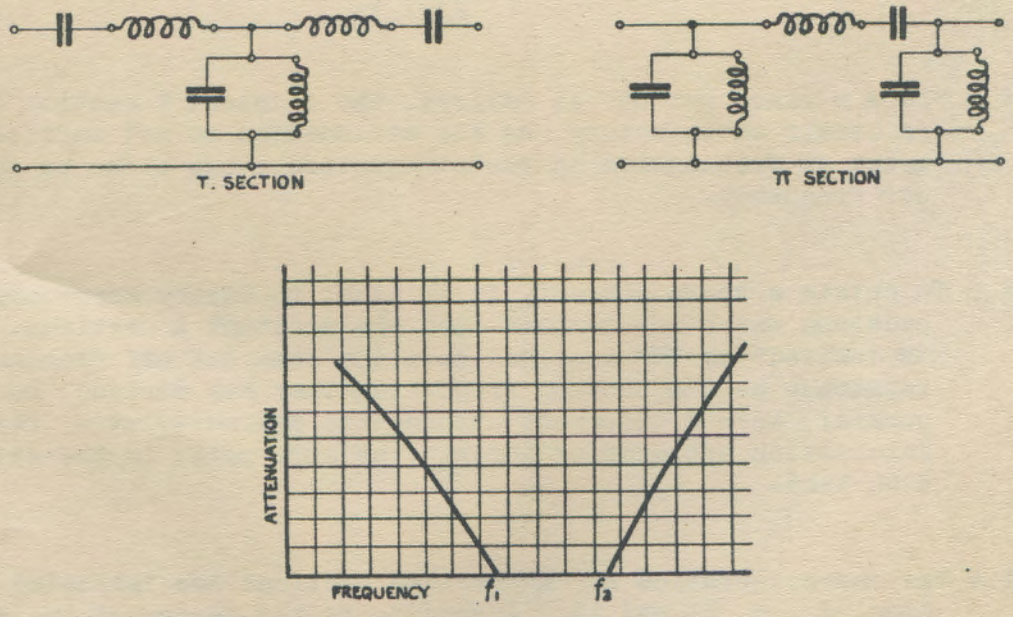

Fig. 7. - Constant K Band Pass Filter Section with ideal attenuation frequency characteristic.

/ Fig. 8

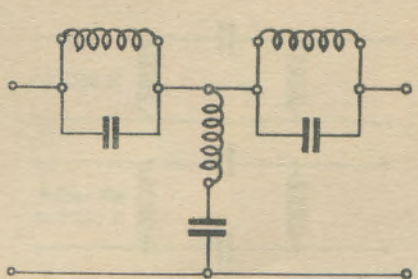

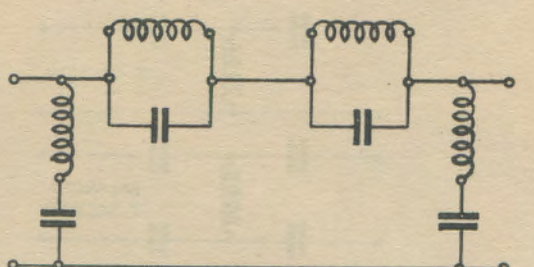

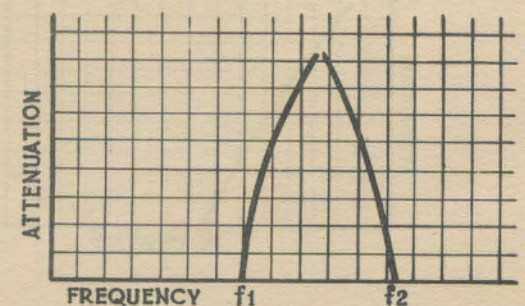

CONSTANT K BAND ELIMINATION FILTER SECTION WITH IDEAL ATTENUATION FREQUENCY CHARACTERISTIC.

FIG. 8.

2.2 Where a sharp cut off is desired, the constant K section is not in itself satisfactory, as the attenuation is not sufficiently great at frequencies in the attenuation range close to the cut off frequency.

2.3 To obtain a sharp cut off, it is usual to employ more complicated sections which are derived from the constant K sections. These "M derived" or "M" sections have the same cut off frequency and impedance as the section from which they are derived, but, in general, have a different attenuation characteristic, the attenuation approaching infinity at some point in the attenuation band.

2.4 The characteristics of "M" derived sections are indicated in Figs. 9, 10, 11 and 12. According to the design of the section, the frequency of infinite attenuation can be made to fall at any point within the attenuation range.

/ 2.5

2.5 By suitably combining constant K and "m" derived sections, a composite filter can be designed within limits to have any desired characteristic. The characteristic curve of a composite low pass filter consisting of one constant K section and one derived section is indicated in Fig. 13

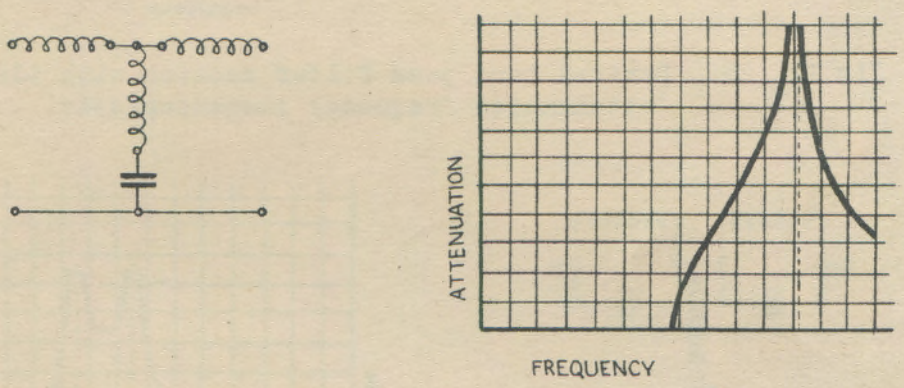

Fig. 9. - M - Derived Low Pass Filter Section with ideal attenuation frequency characteristic.

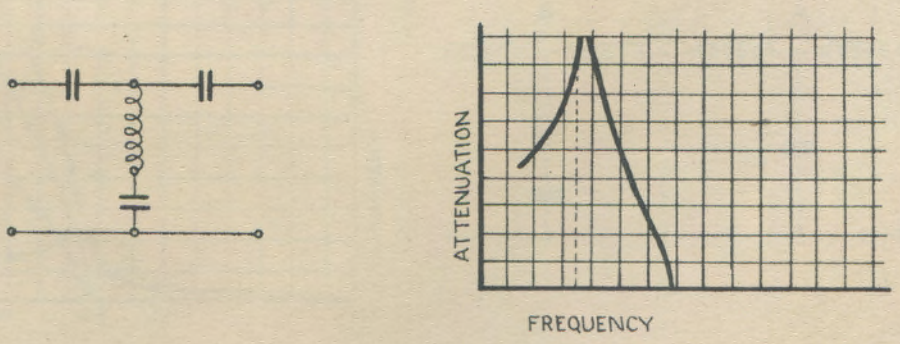

Fig. 10. - M - Derived high pass filter section with ideal attenuation frequency characteristic.

/ Fig. 11

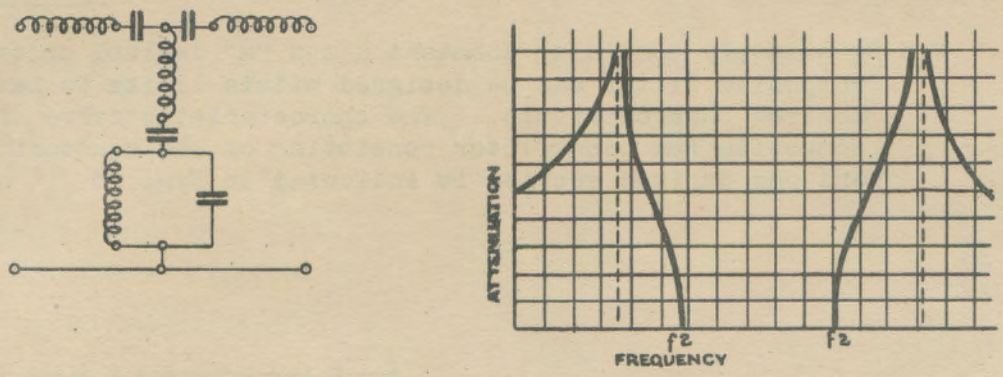

Fig.11 M Derived band pass filter section with ideal attenuation frequency characteristic.

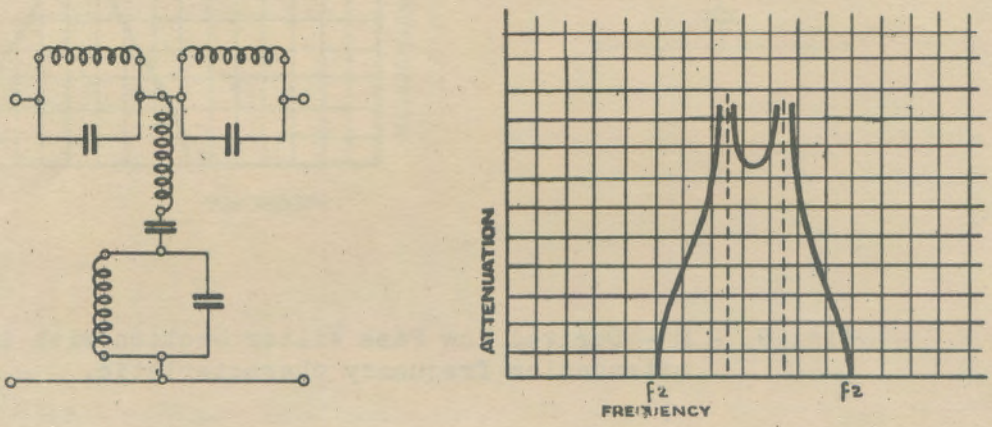

Fig.12 M Derived band elimination filter section with ideal attenuation frequency characteristic.

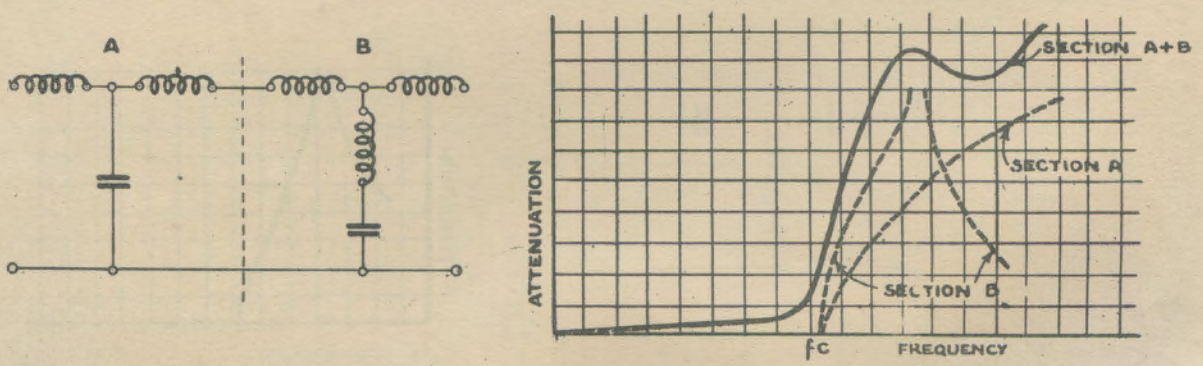

Fig.13 Composite Low Pass Filter made up of One Constant "K" Section and One "M" Derived Section.

3. EXAMPLES OF FILTERS.

3.1 Line Filter Set (3 kc i.e. 3000 cycles). This consists of a high and low pass filter each with a cut off frequency of 3 kilocycles. It is used in connection with carrier telephony and telegraphy whenever it is necessary to separate the voice frequency and carrier current components. The connection of the filters and the graph showing the effect are given in Fig. 14.

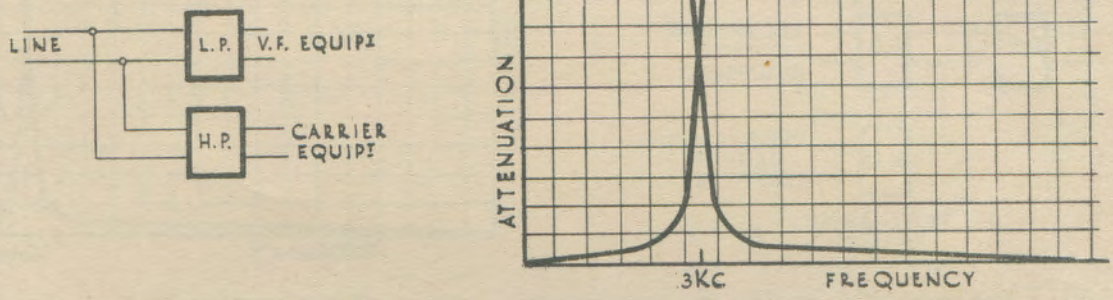

LINE FILTER SET - CUT-OFF FREQUENCY 3 kc.
FIG. 14.

3.2 Line Filter Set 5.6 kc. This consists of a low pass filter and a high pass filter each with a cut off frequency of 5.6 kc. These filters are used for separating carrier and voice frequency currents on circuits where the voice frequency circuit is required for the transmission of musical programmes. These filters can be used with type C.S.4 or C.T.4 carrier systems, but not for type C.N.4, or for single channel carrier telephone or type B telegraph systems, where portion of the transmitted band lies below 5.6 kc - See Fig. 15.

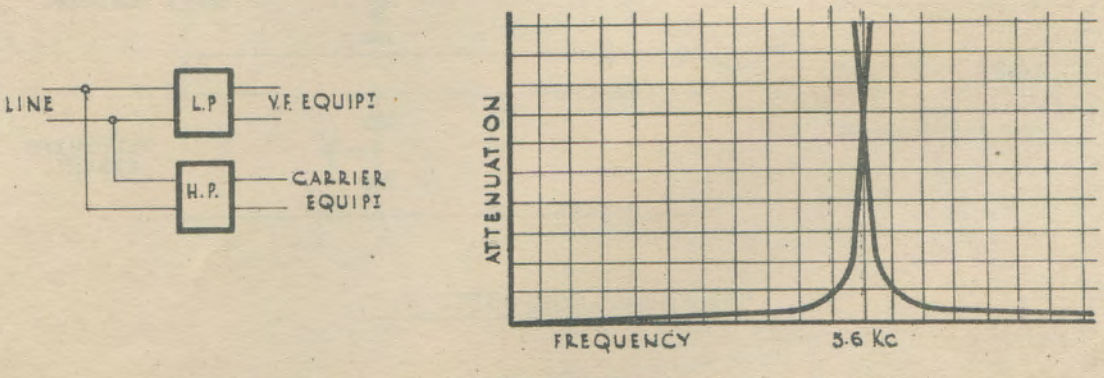

LINE FILTER SET - CUT-OFF FREQUENCY 5.6 kc.
FIG. 15.

/ 3.3

3.3 Line Filter Set 32 kc. This consists of a low pass and a high pass filter, each with a cut off frequency of 32 kc. It is used where a carrier programme system is superimposed over a telephone carrier system to separate the programme carrier frequencies from the telephone carrier frequencies. This is shown in Fig. 16.

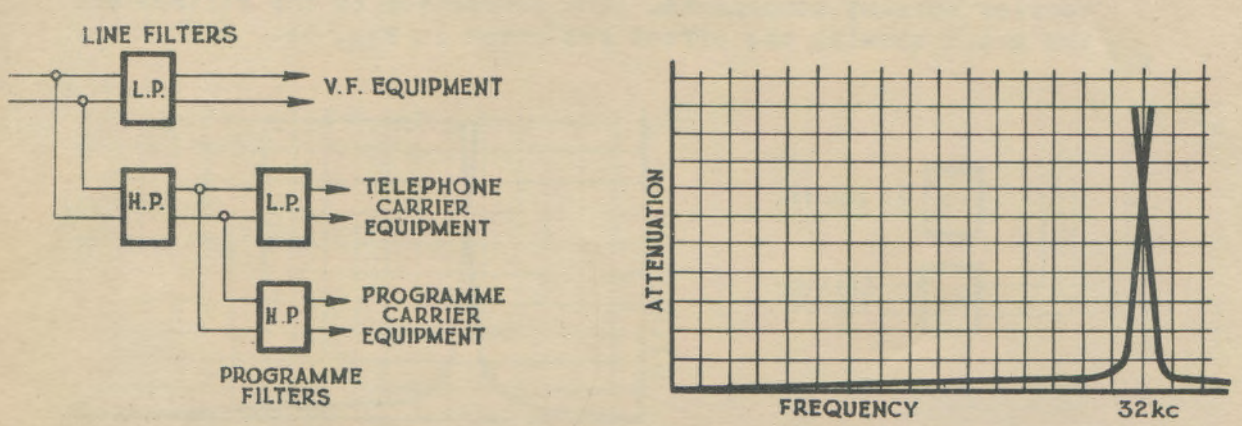

PROGRAMME CARRIER FILTER GROUP - CUT-OFF FREQUENCY 32 kc.

FIG. 16.

3.4 Telegraph Composite Set. This is a high and low pass filter set, which is used where simultaneous transmission of telegraphy and telephony is required over the same pair of wires. It consists of a low pass filter in the telegraph circuit and a high pass filter in the telephone circuit, each with a cut off frequency of about 85 cycles. The elements are shown in Fig. 17.

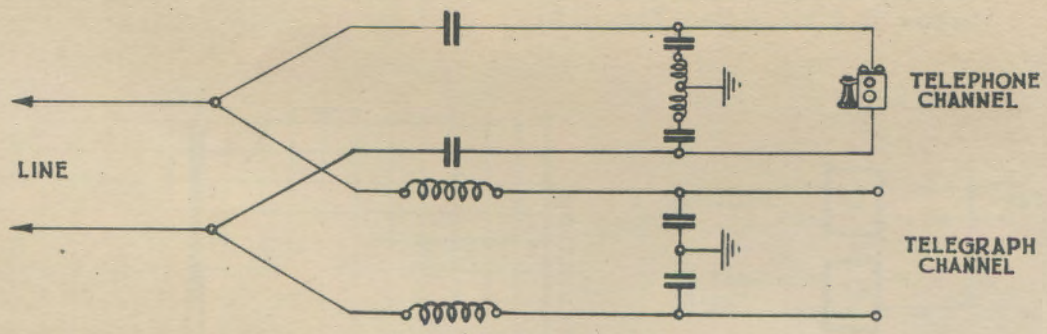

TELEGRAPH COMPOSITE SET.

FIG. 17.

3.5 V.F. Repeater Low Pass Filter. A low pass filter having a cut off frequency of about 2,600 cycles is included in the output circuit of each valve of a voice frequency repeater. This filter limits the transmitted frequency band to 2,600 cycles and so simplifies the design of the balance network, as any line irregularities at frequencies above 2,600 cycles will not affect the stability of the repeater. Further information will be given in Paper 5 on voice frequency repeaters.

3.6 Directional Filters are high and low pass filters used in carrier systems where different groups of frequencies are transmitted in each direction.

3.7 Band Filters are used extensively in carrier telephony to confine the transmitted band on each channel within the desired limits and to select the same band at the receiving terminal. Their application is covered more fully in the section of the course dealing with carrier systems.

3.8 Use of Directional and Band Filters. A block Schematic diagram of a 3-channel carrier system illustrating the use of directional filters and band filters is given in Figure 18 attached. Attenuation frequency characteristics of the filters are given in Figure 19 attached.

As regards band filters the Modulator band filters at the "A" terminal will have similar characteristics to the Demodulator band filters at the "B" terminal; similarly, the Modulator band filters at the "B" terminal will have similar characteristics to the Demodulator band filters at the "A" terminal.

The "A" terminal transmitting Directional Filter will be similar to the "B" terminal Receiving Directional Filter; similarly the "B" terminal Transmitting Directional Filter will be similar to the "A" terminal Receiving Directional Filter.

4. CRYSTAL FILTER.

4.1 With the type of filter made up of coils and condensers, it is not practicable to obtain a sharply defined cut-off owing to the presence of resistance in the coils. The presence of resistance introduces additional losses in the transmitting bands, and reduces the sharpness with which the filter cuts off. In other words, the width of the transition band is increased by this resistance. In telephone and telegraph carrier systems, the number of channels which can be used in a given frequency range depends on the width of the pass band plus the transition bands on each side of it. Obviously, the shorter the transition bands, the greater the number of channels that can be obtained in a given frequency range.

/ Other

Other things being equal, the sharpness with which a properly designed filter cuts off or the width of the transition band is determined by the ratio of the reactance to the resistance of the coils used in the filter. This ratio of reactance to resistance is generally referred to as "Q". The reactance of a coil of given inductance increases directly with an increase in frequency, while its resistance remains fairly constant over the lower frequency range. At the higher frequencies, however, this resistance also increases with an increase in frequency, due to "skin effect" and other causes. As a result, the "Q" of a coil seldom exceeds 400 in practice. In the frequency range up to about 30 kilocycles, this value of Q has been found high enough to provide satisfactory filters for carrier operation but, for frequencies above this value, filter elements having higher Q's are desirable.

4.2 One of the most practicable ways to obtain such high Q elements is by the use of mechanical vibrating systems, such as the "piezo-electric crystal," which possesses a natural mechanical-electrical relationship. Of the many substances that exhibit this piezo-electric effect, the one that has been found most satisfactory for these purposes is crystalline quartz. When a piece of this crystalline quartz is strained mechanically, it sets up an electric field in its neighbourhood, introducing electric potentials on conductors in the field. Conversely, when a piece of crystal is placed in an electric field, its shape changes very slightly. This not only applies to a crystal in its natural form, but thin slabs of the crystalline material cut in certain ways will exhibit even more markedly the same characteristics. When the frequency of an applied alternating voltage is the same as the natural period of mechanical vibration of the crystal, the intensity of vibration of the crystal will reach a sharp "resonant" maximum. The natural frequency or period of vibration of the crystal depends on its dimensions, density and elasticity.

In an electrical circuit, such as a filter, a crystal presents an impedance which can be represented electrically, as shown in Fig. 20, where the inductance, L, represents the mass reaction of the crystal against motion (inertia); the resistance, R, represents the energy dissipating action in the crystal as it vibrates; C_0 represents the natural capacitance of the crystal when at rest (static characteristic); and C_1 represents the elasticity determining the storage of mechanical energy in the crystal (dynamic characteristic).

The ratio of C_0 to C_1 is a constant for any given crystal material. For quartz, the ratio is 125 to 1. The Q for quartz crystals is approximately 20,000 or more.

/ 4.3

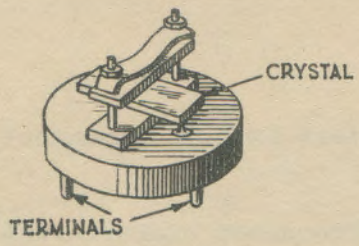

CRYSTAL AND HOLDER.

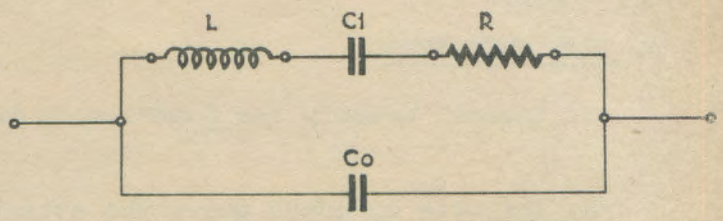

EQUIVALENT CIRCUIT OF QUARTZ CRYSTAL.

FIG. 20.

4.3 Such a circuit will exhibit a resonant and an anti-resonant frequency. By a suitable choice of the dimensions of the crystal and its direction of cut with reference to the axis of the quartz, the frequency of anti-resonance can be arranged to fall at any desired point.

4.4 In the programme carrier system, it is necessary to attenuate highly all frequencies above 42.5 kc., but effectively to transmit frequencies to within 35 cycles less than 42.5 kc. This necessitates a very sharp cut-off characteristic which can only be obtained by the use of a crystal filter.

4.5 In the crystal filter as used in the programme carrier system, such a crystal is inserted in series between the two stages of a resistance coupled amplifier. At the frequency of anti-resonance, the crystal will be equivalent to a very high series impedance between the two stages, and the gain of the amplifier will be reduced accordingly. The gain frequency characteristic of the crystal filter, as used in the carrier programme system, is shown in Fig. 21.

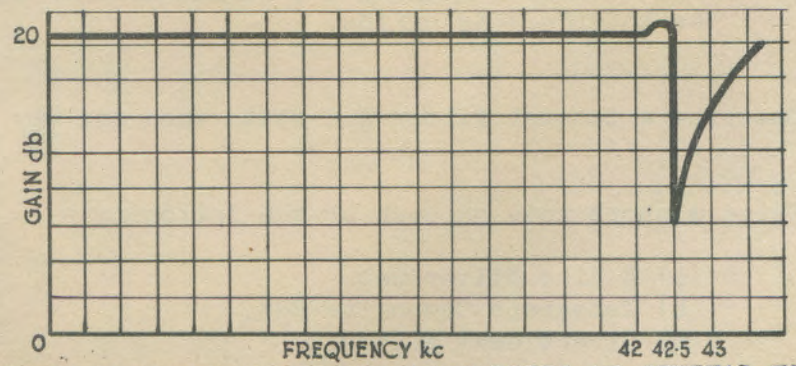

TYPICAL GAIN FREQUENCY CHARACTERISTIC OF CRYSTAL FILTER.

FIG. 21.

4.6 The crystal filter is used in conjunction with a conventional type filter for transmitting effectively the lower sideband from 42,465 to 35,000 cycles. (Further descriptions of the programme carrier system will be given in a later paper.)

/ 5.

5. TEST QUESTIONS.

1. Explain briefly the function of wave filters in telecommunication.

2. Indicate on graph paper the attenuation frequency characteristic of -

(a) A low pass filter to transmit frequencies below 3,000 cycles.

(b) A high pass filter to transmit frequencies above 3,000 cycles.

3. Explain briefly the use of band filters in carrier telephony.

4. A carrier telephone channel employs a carrier frequency of 12.9 kilocycles and transmits the upper sideband in the A to B direction. Draw a curve showing approximately the attenuation frequency characteristic of the modulator band filter at the A terminal.

5. (a) Explain how high and low pass line filters are used to separate carrier and voice frequencies when a carrier system is superimposed over a physical circuit.

(b) A physical circuit over which a carrier system is superimposed is required to be divided at an intermediate office. Draw a diagram showing the arrangement of filter sets at the intermediate office.

6. Describe a crystal filter and state when and why it is used.

7. Write a short note on each of the following -

(a) A Line Filter Set.
(b) Telegraph Composite Set.
(c) Directional Filter.

END OF PAPER.

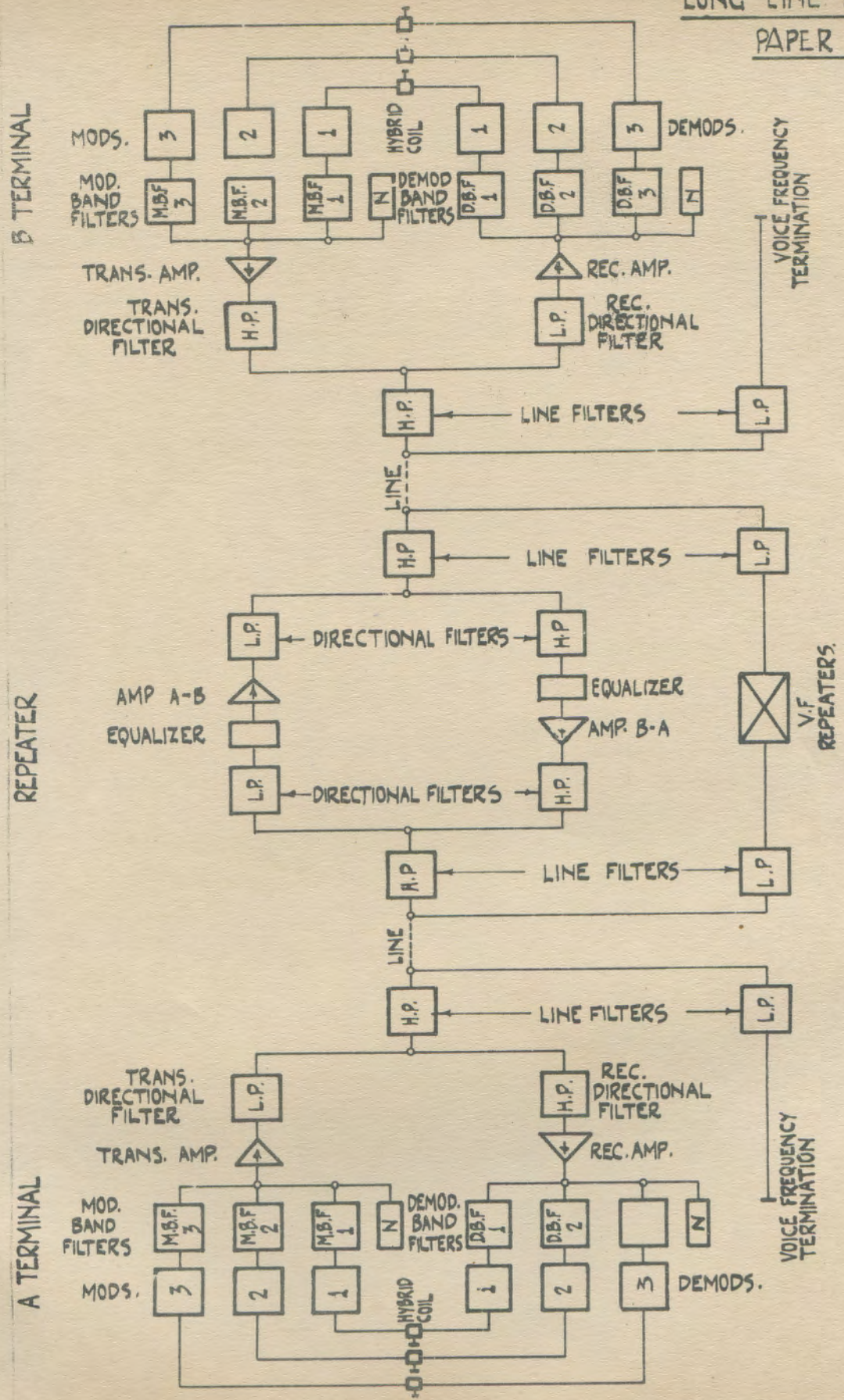

FIG. 18.

BLOCK SCHEMATIC OF TYPE C - 3 CHANNEL CARRIER TELEPHONE SYSTEM

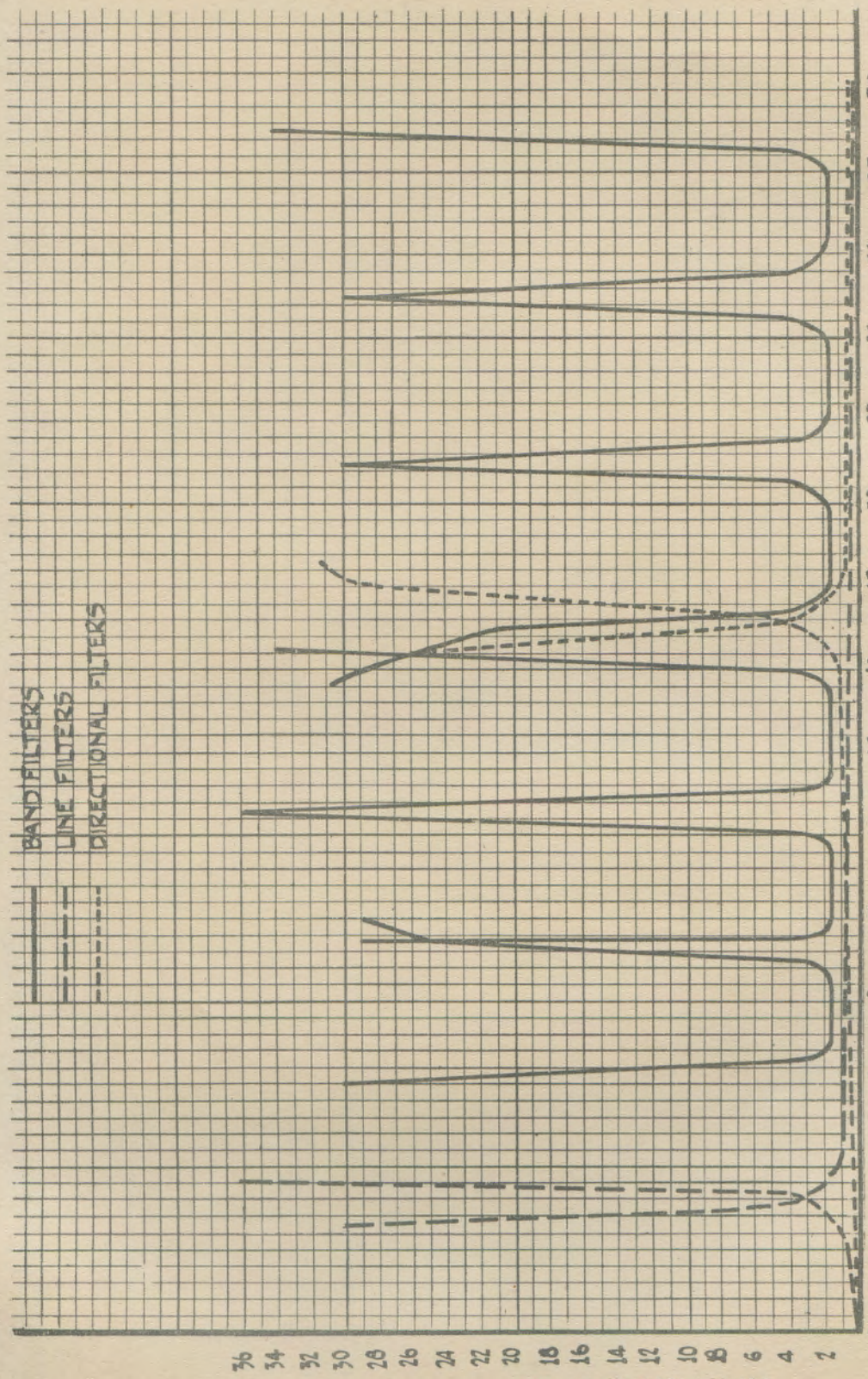

FIG. 19

ATTENUATION-FREQUENCY CHARACTERISTICS OF FILTERS USED IN 3-CHANNEL CARRIER TELEPHONE SYSTEM

COMMONWEALTH OF AUSTRALIA.

Chief Engineer's Branch,
Postmaster-General's Department,
Treasury Gardens,
Melbourne. C.2.

COURSE OF TECHNICAL INSTRUCTION.

LONG LINE EQUIPMENT.

CONTENTS:

1. VOICE FREQUENCY REPEATERS.
2. THE 21 REPEATER.
3. THE 22 REPEATER.
4. CORD CIRCUIT REPEATERS.
5. FOUR WIRE REPEATERS.
6. PENTODE REPEATERS.
7. BALANCE NETWORKS.
8. GAIN CONTROL.
9. SIGNALLING FACILITIES.
10. TROUBLES IN THERMIONIC VALVES.
11. MAINTENANCE OF REPEATERS.
12. TEST QUESTIONS.

1. VOICE FREQUENCY REPEATERS.

1.1 General. The requirements of modern transmission have been given in Paper No. 1 of Telephony III and students are advised to re-read that Paper before proceeding with the following, but for those who have not a copy paras. 4.7 and 4.8 are reprinted here:-

"4.7 Provision of Circuits. Fig. 1 shows, in skeleton form, the Department's "Standard Reference Circuit", and the grade of transmission provided by this telephone connection is known as the "Standard Grade of Overall Transmission".

This diagram shows that each connection may be considered as

/ made

made up of three units, two of them being the separate local lines and instruments at the ends of the connection, whilst the third is the transmission line joining the local line units and consisting of junction circuits, switching exchanges, trunk line transmission aids, e.g. repeaters, as may be required. It will be noted that this transmission line is to be equivalent to a 15 db. attenuator. Fig. 2 gives three instances of typical connections conforming to this standard of overall transmission.

The telephone system is designed so that any connection between two subscribers will provide transmission at least equal to that of this reference circuit. In this circuit the loss introduced by the apparatus and lines connecting the two telephones is approximately 29 db. The Telephones of the Reference Circuit are of the Handset type (see Telephony II, Paper 6). When less efficient telephones are used, the allowable loss in the local lines must be reduced to provide the same grade of transmission. Similarly, more efficient exchange transmission, bridges etc., will allow an increase in the loss in the lines.

The allowable limit of resistance of the subscriber's line with 250/250 ohm battery feed relays and transmitter C.B. No. 1 is 275 ohm whilst with 50/50 ohm nickel sleeve relays and Resistor, barretter or ballast lamp at the exchange with transmitter Inset No. 10 in the telephone the line resistance may be 540 ohms.

4.8 The loss between the telephones is divided up into two portions for the purpose of providing circuits -

(a) Subscribers' circuit to exchange, and
(b) Junctions and trunks between any two exchanges.

The loss in case (b) must not exceed 15 db. leaving, in the case of the reference circuit, about 14 db. for the sum of the losses from telephone to exchange (sending loss) and from exchange to telephone (receiving loss). The sending loss is approximately 10 db. and receiving loss approximately 4 db.

The reasons for the difference in the figures quoted for sending and receiving losses are that the receiving loss consists of attenuation only, whereas the sending loss is determined by the attenuation and the d.c. current in the transmitter as explained in Paragraph 4.2."

1.2 To obtain the required low losses in the circuits connecting the main trunk centres, apparatus must be inserted which will restore the power level to compensate for the inevitable line losses. The equipment developed for this purpose is known as the Telephone Repeater. It makes use of the Thermionic valve as an amplifier.

/ 1.3

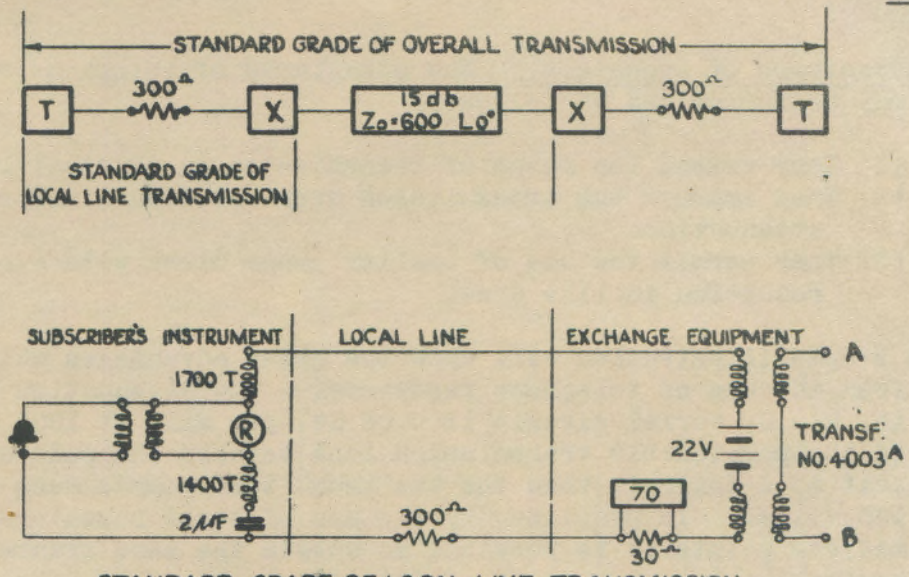

FIG. 1.
STANDARD GRADE OF OVERALL TRANSMISSION

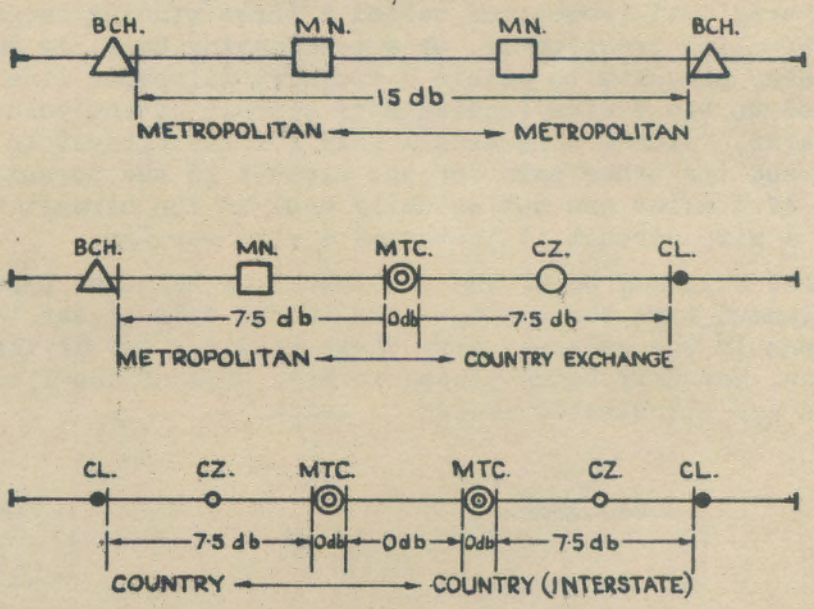

BCH. = BRANCH EXCHANGE
MTC. = MAIN TRUNK CENTRE
CL. = COUNTRY LOCAL EXCHANGE
MN. = MAIN EXCHANGE
CZ. = COUNTRY ZONE CENTRE

FIG. 2.
TYPICAL CONNECTIONS OF STANDARD OVERALL GRADE

1.3 Advantages of Repeaters. The advantages of telephone repeaters may be summarized as follows:-

(1) They extend the range of transmission on physical lines.
(2) They improve the transmission over existing lines of high attenuation.
(3) They permit the use of smaller gauge wires with a consequent reduction in line cost.

1.4 A simple illustration will show the great advantages which accrue from the use of telephone repeaters. The attenuation of a 200 lb. H.D.C. aerial circuit is 0.06 db. per mile at 1000 cycles. If the permissible transmission loss between the ends of the circuit is 6 decibel, then the two trunk test boards must be within 100 miles. In practice, by the use of three repeaters at intermediate points it is possible to obtain the same transmission equivalent over a circuit of 600 miles.

1.5 An important piece of apparatus used with repeaters and in other plant associated with long line working is the Hybrid Coil. This will be described before details of repeaters.

2. HYBRID COILS AND THE 21 REPEATER.

2.1 The hybrid coil (sometimes called a three winding transformer, a differential transformer, or a terminating unit) is employed in repeater circuits to enable a two wire telephone line to be connected to the 4 wire (equivalent) circuit of the voice frequency repeater. The 4 wire uses 1 pair for the circuit in one direction and the other pair for the circuit in the opposite direction. Even if 4 wires are not actually used but the circuit is equivalent to a 4 wire circuit it is termed 4 wire working.

2.2 A hybrid coil may be of the unbalanced or balanced type. In the unbalanced type the windings are in one side of the line only, whereas in the balanced type these windings are divided into two halves, one half being placed in each side of the line. Both types are illustrated in Fig. 3 below.

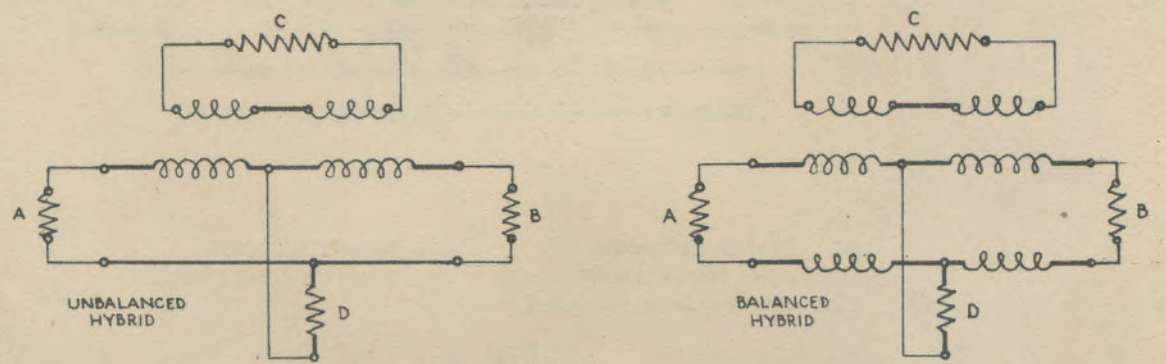

FIG.3.

/ 2.3

2.3 In Fig. 4 the hybrid coil is replaced by a square within which are indicated the various transmission paths which exist under ideal conditions of equality of opposite impedances. The letters correspond to those of Fig. 3. Between each two adjacent impedances the equivalent of the transmission path is 3 db, whilst between opposite impedances the transmission loss is infinite. When one pair of opposite impedances is not similar the transmission loss between the other pair is reduced to an extent depending on the amount of dissimilarity. As an example we may take the 21 type repeater shown in Fig. 5. This has a balanced hybrid and an amplifying thermionic valve connected through input and output transformers. The line east corresponds to A of Fig. 4 above, line west to B, the input circuit to D and the output circuit to C. Energy arriving from line west therefore divides between the input and output circuits.

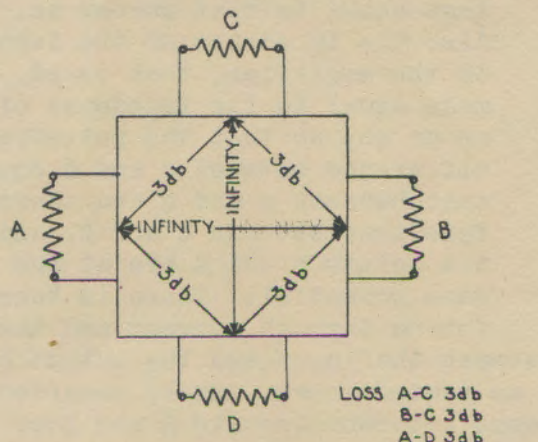

FIG. 4.

The first part is transferred to the input transformer and thence to the grid of the valve. After amplification it passes through the output transformer to the third winding of the hybrid. The second part of the incoming energy which passes from the line to the third winding of the hybrid is transferred through the output transformer to the plate of the valve, but it cannot pass in this direction and is lost.

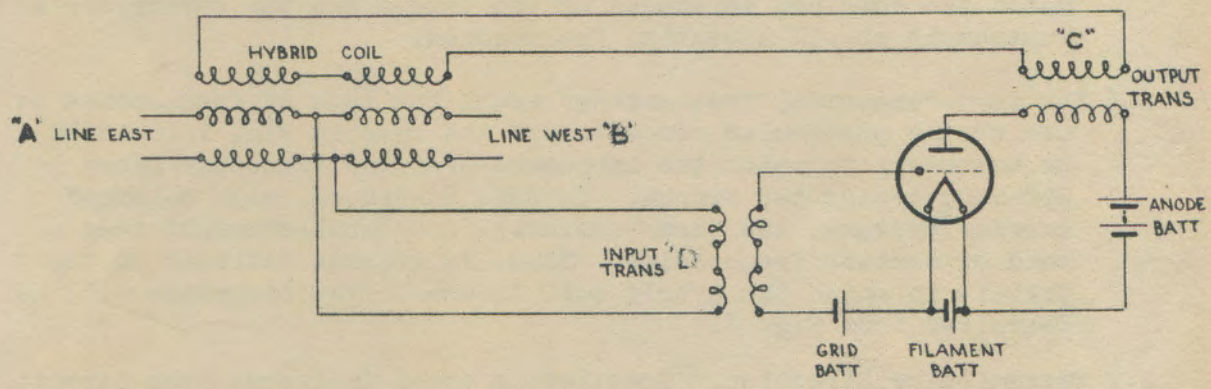

FIG. 5.
REPEATER - TYPE 21.

/ 2.4

2.4 A simplified circuit with an unbalanced type of hybrid and showing the amplifier as an enlarged arrow head is given in Fig. 6. The infinite impedance between A and B circuits of Fig. 4 may be studied from Fig. 6. The winding ac is inductively coupled to cb and produces across it a voltage equal to that across ac. Also the impedance of the input to the amplifier, that is cd, is made equal to the impedance of ac or cb, so that the potential difference between c and d equals that between a and c and therefore that between c and b, and the points b and d are at the same potential. There is therefore no through current and the incoming energy divides only between the input and the output circuits of the amplifier. This, as stated above, can be regarded therefore as an infinite impedance between circuits A and B of Fig. 4 but is true only when the impedance of line east equals that of line west. Balance can be more positively obtained by the means shown in Fig. 7 in which the balancing line is replaced by an artificial line. This figure illustrates the use of the hybrid coil in connecting the two-wire telephone circuit to the voice frequency repeater equipment. Coils 1, 2, 3 and 4 are connected series aiding in that order, and each of the coils has the same resistance and the same number of turns. Coil 5 need not be the same as coils 1-4, so that a step-up or step-down effect may be obtained by suitably choosing the turns ratio. It is essential, however, that coils 1-4 should be equal in all respects and connected series aiding to give the proper phase relationship.

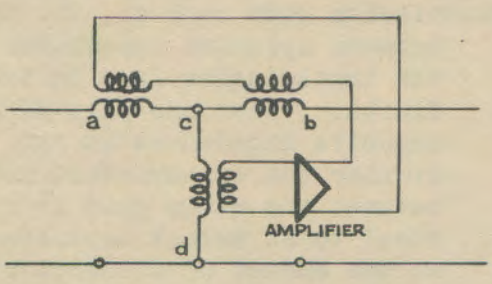

UNBALANCED HYBRID WITH AMPLIFIER.

FIG. 6.

2.5 The impedance Z2 is an artificial electrical network designed to match the combined impedance of the line A and the subscriber's instrument at all essential frequencies.

2.6 The term "essential frequencies" means the band of frequencies in use on the particular circuit. In the case in Fig. 7 it would be necessary to match the impedance over the frequency range 200-2600 cycles per second. In some instances, e.g. balanced carrier systems, the term "essential frequencies" might mean a band of carrier frequencies. Thus, it depends entirely on the circuit in which the hybrid coil is used. The operation will be described from Fig. 7.

2.7 Transmitting Direction. Considering power delivered from Circuit 1 into the hybrid coil, if the balance network is a perfect match for the line and its termination, then the power will divide equally between Circuits 2 and 3. In other words, there will be a loss of 3 db. in power in going from the line to the input circuit.

/ This

This half of the power will be amplified in the voice frequency repeater and transmitted to line. The half of the power which

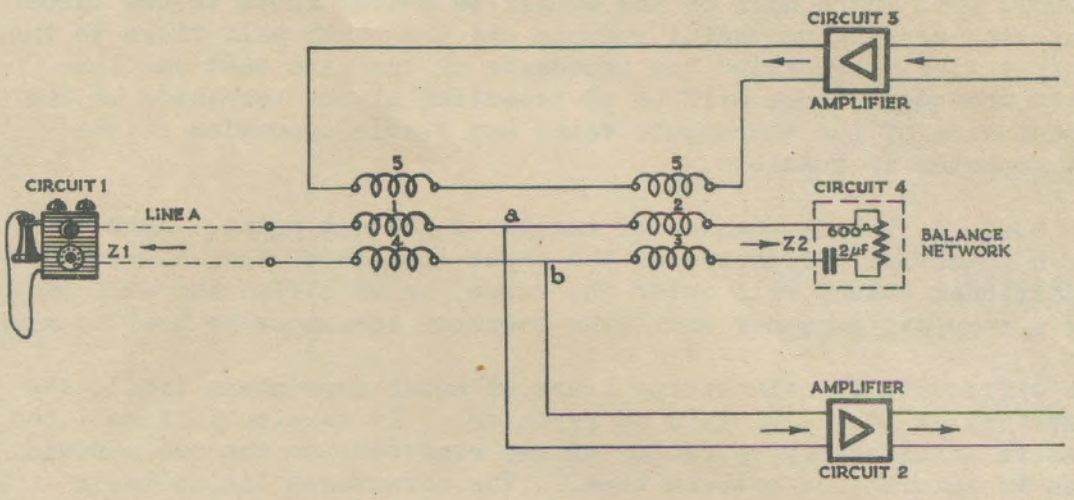

FIG. 7

passed into the output circuit is wasted in circuit 3, but it does not cause any harmful effects.

2.8 Receiving Direction. Amplified power from Circuit 3. Provided that Z1 equals Z2 and that the turns ratio in coils 1-4 are equal, the power will divide equally at the points a, b, half going to the line and half to the balance network. The latter half is dissipated in the balance network. Considering current at either point a or b under these conditions, it will be appreciated that it will divide equally, and flow in opposite directions through each half winding so that, under this condition, no power will be delivered into Circuit 2.

2.9 The operation of the hybrid coil is not affected if the connections to the input and output circuits are interchanged and in practice either arrangement is employed. This is important and will be appreciated if the reversed case is considered and the amplified power were delivered from Circuit 2 to the hybrid coil. Provided the previously mentioned conditions for Z1 and Z2 and the transformer windings 1-4 are met, the power will divide equally at points a, b, and half will be delivered to the line and half to the balance network. Considering currents at points a or b, the division will again be equal and opposite in the half winding 1-2 or 3-4, so that no power will be delivered to Circuit 3 under this condition.

2.10 Reverting now to the action of the 21 type repeater shown in Fig. 5,

/ the

the distribution of energy is controlled by the hybrid as explained. That portion entering the input circuit is amplified by the valve and applied through the third winding to the centre point of the hybrid coil where half of the amplified energy flows to the incoming line serving no useful purpose and the other half flows to the output line. Provided the impedance of the line east and line west are equal there will be no potential at the terminals of the input side of the thermionic valve and stable operation of the 21 repeater is possible.

2.11 If, however, the impedances of the lines are not equal, there will be a potential difference at the input circuit of the valve. The additional energy will enter the valve, be amplified and will add in a cumulative manner until the repeater commences to howl or sing.

2.12 The difficulty of maintaining lines at equal impedances limits the application of the 21 type of repeater. It is also difficult to ensure satisfactory operation of two repeaters on the one circuit due to interaction between them. The advantages lie in their cheapness, the ease of maintenance, and in the safe operation since a valve failure does not put the line out of action. This last point is important since these repeaters are generally located at isolated stations.

3. THE 22 REPEATER.

3.1 The 22 repeater is a two-wire unit employing two thermionic valves and two hybrid coils, one being associated with the line east, the other being associated with the line west. The simplified schematic arrangement of a 22 repeater is shown in Fig. 8.

3.2 To ensure balance of the output circuit, each hybrid coil has an artificial line (marked "Bal" in the figure) connected to its terminals having an impedance equal to that of the line connected to the other terminals of the hybrid coil. The input circuit of the thermionic valve V.1. is connected to line west and its associated balance network while the output is connected to the line east and its associated network. The input and output circuits of the amplifying element V.2 are connected respectively to line east and its associated balance and to line west and its associated balance. The wave of energy from the line west divides at the hybrid coil in exactly the same way in the 21 repeater. That portion of the energy entering the input circuit of the Thermionic Valve V.1 is amplified and delivered to the centre points of the hybrid coil associated with the east line. If the impedances of the line east and its associated network are equal there is no potential at the centre point of the hybrid coil and energy is not sent back into the amplifier V.2. If these impedances are unequal, energy is fed into V.2, amplified and passed on to the centre point of the line west hybrid coil. The effect of an unbalance between the network and the line of a repeater

/ gives

gives rise to "singing" or sustained oscillation around the repeater circuit. If a balance network could be designed as an ideal match for a line at all frequencies, the gain which could be used in a repeater would be infinite, assuming that the hybrid coil itself was perfectly balanced. However, in practice, exact similarity in impedance between the line and the balance network in all weather conditions is impossible and the gain is limited by the tendency of the repeater to sing. The "singing point" is an expression for the lowest gain in the circuit at which a repeater will sing. The safe working point for stability in a repeater is the singing point less 5 decibel.

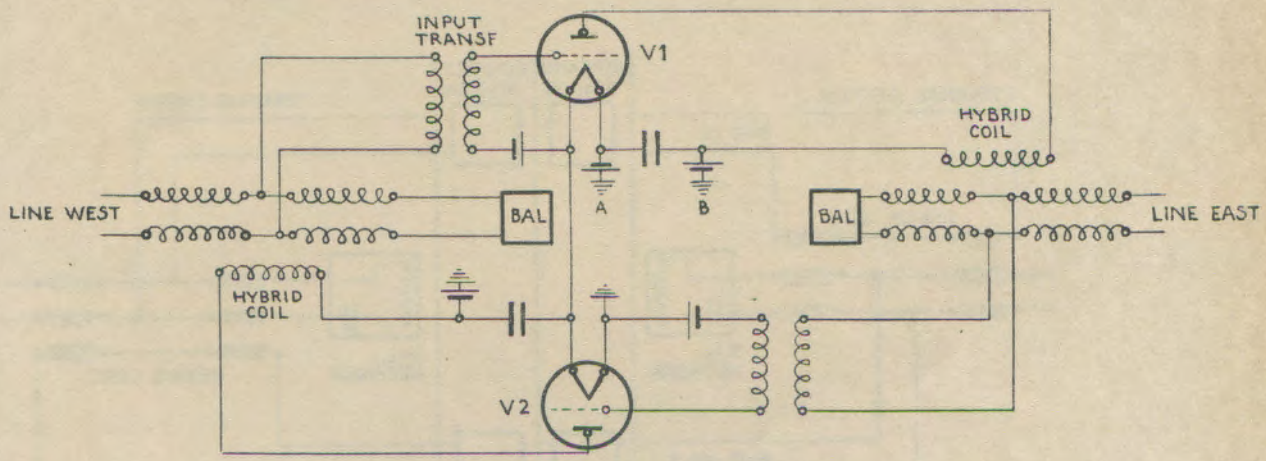

FIG. 8.
REPEATER - TYPE 22

4. CORD CIRCUIT REPEATERS.

4.1 The cord circuit repeater is an adaptation of the 22 type so arranged that when two lines are switched together at the switchboard the cord circuit will include the repeater and automatically select the balancing network appropriate to the lines plugged up. A line terminates on a jack in the normal manner but immediately beneath is another jack with a balance network to correspond to the line. Twin plugs on the answering cord connect to the line and network circuit of one side of the repeater. Similar plugs on the calling cord form the connections to the other side of the repeater. In view of the fact that the repeater may be required to operate between lines with widely differing characteristics a range of balance networks is provided. The switchboard operator, by means of keys, selects the most suitable balance network for the types of lines to be connected to the repeater and by means of keys located on the operating position regulates the gain to the most suitable value.

4.2 This form of repeater is extensively used for improving cross-country traffic in country centres. The explanation of the operation of the 22 type of repeater will apply to the cord repeater.

/ 5.

5. FOUR WIRE REPEATERS.

5.1 The four wire repeater arrangement represents a special condition to ensure satisfactory operation either on very long circuits or else on specially planned long cable installations. These circuits differ from the types of repeater circuits given previously in that the hybrid coils are used only at the terminals, the "go" and "return" circuits being separate pairs of wires and the repeaters used at intermediate stations are either of one or more stages according to the amount of gain required. Amplifiers are required in each direction of transmission. The complete schematic arrangements are as shown in Fig. 9.

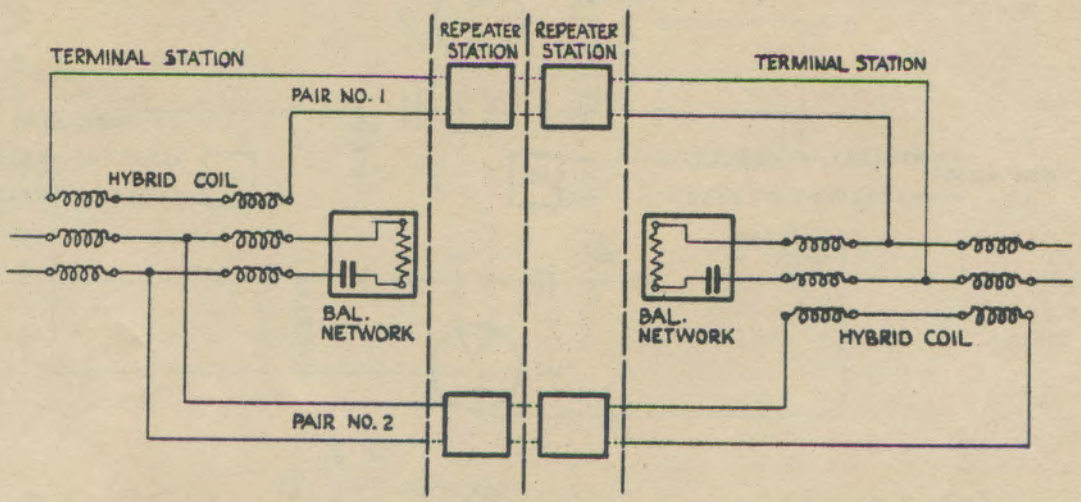

FIG. 9.
4 WIRE REPEATER BLOCK

6. PENTODE REPEATERS.

6.1 As a special case of 4-wire operation, mention should be made of the new pentode installations. The four-wire (two pairs) forming circuit are of 20 lb. paper insulated star quad cable conductors and the repeaters are used at the receiving end and are made as simple as possible to enable their employment at frequent intervals.

6.2 The arrangement between Melbourne and Geelong is shown schematically in Fig. 10 attached. In each line the repeater is used at the receiving end of the circuit. The repeater unit consists of a pentode thermionic valve, an input and output transformer, and a hybrid coil. The heater element of the tube is energised from a 4 volt A.C. Transformer; the anode is connected either to a battery or to a rectifier furnishing 220 volts. The grid bias voltage is obtained by the drop over the cathode resistor. The input transformer is used to terminate the cable as well as to connect the cable to the input of the pentode. An output

/transformer

transformer when used alone enables the repeater to be used on an intermediate point in a conventional 4-wire circuit as shown in dotted connections. When used with the special hybrid coil and balance network permanently wired in the repeater installation it functions as a terminal amplifier and provides a 4-wire to 2-wire connection as shown in the figure. The pentode valve will give the same output as the 101 type used in the 22 type line repeater.

6.3 The maximum and minimum gains furnished by a terminal repeater are 34 and 18.5 db. respectively. The control in gain is obtained by altering the value of feedback resistances connected between the cathode and the grid. The input and the output transformers are identical. The terminating or balancing winding 4/5 is closed on 600 ohms, and in the output transformer is used for monitoring purposes. The impedance across terminals 1 and 3 of the input or output transformers is 850 ohms which matches the line impedance.

6.4 When used on a terminal repeater, tappings 1T and 3T shown in full lines in the output transformer provide a 300 ohm output impedance. When looking into the output of the line winding of the hybrid coil, the impedance is again 850 ohms to match the line to which it is directly connected. The middle point of the line winding of the coils is accessible so that phantom circuits may be derived without the use of external line repeater coils.

7. BALANCE NETWORK.

7.1 As previously stated, wherever a hybrid coil is associated with a repeater it is necessary to balance the line with a network. The simplest balance network consists of a resistance and condenser in series but other combinations of these elements are employed to give closer balance at a wide range of frequencies.

8. GAIN CONTROL. There are three main methods employed in the control of the gain furnished by the thermionic valve element of a repeater.

8.1 The general method employs a manually operated potentiometer between the secondary winding of the input transformer and the valve. The position of the variable arm determines the potential applied to the grid of the thermionic valve and hence the amplification.

8.2 In certain repeaters, particularly of the pentode type, the gain is controlled by alteration to the feedback resistance. This varies the amount of energy fed back from the output to the input of the circuit. The greater the amount of feedback the less the available output.

8.3 Automatic gain control. In special cases where cord circuit repeaters are used, the gain is controlled automatically depending on the lines connected. The double plug used to connect

/ the

the line and the balancing network has a sleeve circuit on the network plug which connects the gain control. Some lines require a higher gain than others and when interconnected the gain is set at the average of the requirements of the two lines. Three relays are connected in series to the sleeve of the plug and an appropriate resistance is connected to the sleeve of the jack to operate one, two or three of the relays. Resistances are connected in series and in shunt in the amplifier circuit according to the relays operated and so control the amplification required by the lines plugged up.

9. SIGNAL FACILITIES. Several methods of ringing over repeated lines are available as hereunder:

9.1 16 cycle signalling - if a line has no composite equipment it is possible to signal with 16 cycle exchange ringing current. However, the repeater will not pass currents of 16 cycles and it is necessary to provide relay equipment to relay the ring around the repeater.

9.2 135 cycle signalling - if composite equipment is fitted either for dialling or telegraph purposes then ringing current having a frequency of 135 cycles is employed, ringing current being passed around the repeater as for the 16 cycle ring. Mechanically tuned relays are used to relay the ring to the distant side of the repeater.

9.3 Voice Frequency Signalling. The success of the foregoing methods of signalling is dependent upon the maintenance of the relay action at the repeater station. The results have not been wholly satisfactory and this has led to the development of special signalling systems utilizing currents with frequencies within the voice band. Three types have been developed, viz. 1,000 cycles, 2,500 cycles and 520 cycles. The 1,000 cycles signalling system is in general use in Australia.

9.4 The normal 16 cycle ring from the switchboard is converted into 1,000 cycle current interrupted at the 16 cycle rate and fed to line. This 1,000 cycle signalling current is transmitted by the repeater since it is within the voice frequency range. At the distant end a tuned circuit receives the 1,000 cycle current which is rectified by means of a thermionic valve. The rectified current takes the form of a unidirectional current pulsating 16 cycles per second which is converted to an alternating current of frequency 16 cycles and fed into a 16 cycle tuned circuit. A relay is operated thereby and applies the normal ring to the telephone switchboard. This will be further dealt with in the next paper.

10. TROUBLES IN THERMIONIC VALVES.

10.1 Poor vacuum is usually due to rough handling, but may be caused

/ by

by temperature stresses in the glass due to poor annealing. A valve with a crack or with a leaky seal will lose its vacuum completely. When the vacuum is destroyed, the valve, of course, fails to function: its filament remains dark even when carrying normal current, and the glass envelope becomes much hotter than normal due to convection currents in the enclosed air.

10.2 Broken glass supports, bent plate and grids may be caused by rough handling or temperature stresses, which may cause distortion or noise and lead to danger of short circuits.

10.3 Ruptured filaments may be caused by rough handling, especially if accompanied by the troubles given in 10.2 above, but are usually due to burning out. Burnouts may be caused by excessive filament currents, though filaments working on normal currents will burn out if kept in service long enough.

10.4 Bright spots. Filaments due to slight irregularities in manufacture sometimes exhibit excessive brightness over short portions of their length instead of presenting a perfectly uniform appearance. These are known as bright spots, and indicate excessive local heating. They tend to get worse as the valve is used, and failure of the filament usually occurs at the bright spot. Bright spots showing only a moderate degree of contrast to the rest of the filament do not interfere appreciably with the performance of the valve, but marked brightness indicates a probable early failure by burning out. The insulation resistance of valves with bright spots is likely to fall as it approaches the end of its life, due to material driven off from the filament being deposited on the inner surface of the glass.

10.5 Blue haze. Under certain conditions thermionic valves exhibit a faint bluish or pinkish glow in the space surrounding the electrodes. This is known as blue haze, and is due to traces of gas in the tube. As the plate or grid voltage is raised, the velocity of the electrons increases until they are able to disengage other electrons from the atoms of gas they encounter. This is accompanied by light and a large increase in the space current due to the increased supply of electrons and the positively charged atoms they leave. This action is called ionization by collision. Valves in which blue haze occurs have characteristics which differ more or less widely from perfectly evacuated valves and should, in general, not be used where good results are desired. The gas may be disengaged from the surfaces of electrodes and glass that have not been sufficiently heated in the process of exhausting the valve, or it may enter through defective seals or cracks. The valves now available are not frequently subject to blue haze when operated in the circuits and with the voltages for which they are designed.

/ 10.6

10.6 Low Insulation Resistance. A deposit of material in a thin film on the interior glass surface of the valve around the electrode seals is occasionally encountered. This provides a leakage path between the various electrodes which interferes with the behaviour of the valves. The most serious effect is grid leakage to either the filament or plate. It has been found possible to dissipate this film by a suitably applied electrical discharge, after which the valve behaves in the normal manner if it is not otherwise defective.

10.7 Low Gain. Some tubes give less gain than they should, though the gain may not vary excessively with filament current. This condition may be brought about by one or more of several different causes not readily apparent, such as displaced electrodes or low insulation.

10.8 Low filament activity is a frequent and important source of trouble in thermionic valves and as it gives no visible sign of its presence, special tests are required for its detection.

11. MAINTENANCE OF REPEATERS.

11.1 For proper maintenance of telephone repeaters it is necessary that a series of routine tests should be regularly carried out on the repeating equipment as well as on the through circuit. The tests are divided into four groups, i.e. daily, weekly, quarterly and yearly tests.

11.2 The daily tests include (a) Repeater gain test to determine the amplification on the normal working stops; (b) Transmission equivalent test to determine the overall transmission equivalent of the circuit; (c) Talking test to determine the voice quality and to test crosstalk and noise; (d) A circuit signalling test over the through circuit under normal conditions to ensure that the terminal ringing equipment is working satisfactorily and with 135 cycle ringing to test the relay equipment at the repeater; (e) Overall circuit balance test to check the balance conditions without disconnecting the lines or networks.

11.3 The weekly tests comprise the test of fuse alarms and the test of repeater alarms. The quarterly tests consist of more detailed balance tests and the thermionic valve rejection test and the balance test of repeaters.

11.4 The yearly tests comprise (a) Gain versus potentiometer stops for each direction of transmission through the repeater on each stop; (b) Gain versus frequency test over the frequency range of the repeater; (c) Mechanical inspection to determine the state of the wiring and the equipment.

11.5 A rapid check of a repeater by means of overall circuit balance test is done as follows:-

/ Without

Without disconnecting either of the lines or networks from the repeater, an observation should be made on the point at which the repeater sings when its gains are increased, all other conditions in the circuit remaining normal, including the gain of other repeaters, if any, in tandem on either side of the line.

By comparing the results with those obtained on previous occasions under similar conditions it can readily be seen whether any serious trouble has developed. It is not essential that the ends of the circuit be properly terminated for this test, i.e. tests can be made in the intervals between the two successive conversations, under which condition the ends of the line will be terminated with the receiving signalling apparatus.

In this manner the service need not be interrupted, no patching is required, and no co-operation is necessary from other stations.

Should this test reveal any fault which cannot be readily located a more detailed test is necessary as laid down in Maintenance Circular No. 13 from which this section is summarised.

12. TEST QUESTIONS.

1. What is the purpose of a Telephone Repeater?

2. State with the assistance of sketches the difference between the 21 and 22 type repeaters.

3. What do you understand by 2-wire and 4-wire working when referring to telephone repeaters on trunk circuits?

4. What are the functions of -

   (a) The hybrid coil;
   (b) Balance network;
   (c) Automatic Gain Control Circuit?

5. What do you understand by the term "singing point"? What is the stable adjustment of a repeater?

6. What signalling arrangements can be applied over a repeatered circuit?

END OF PAPER.

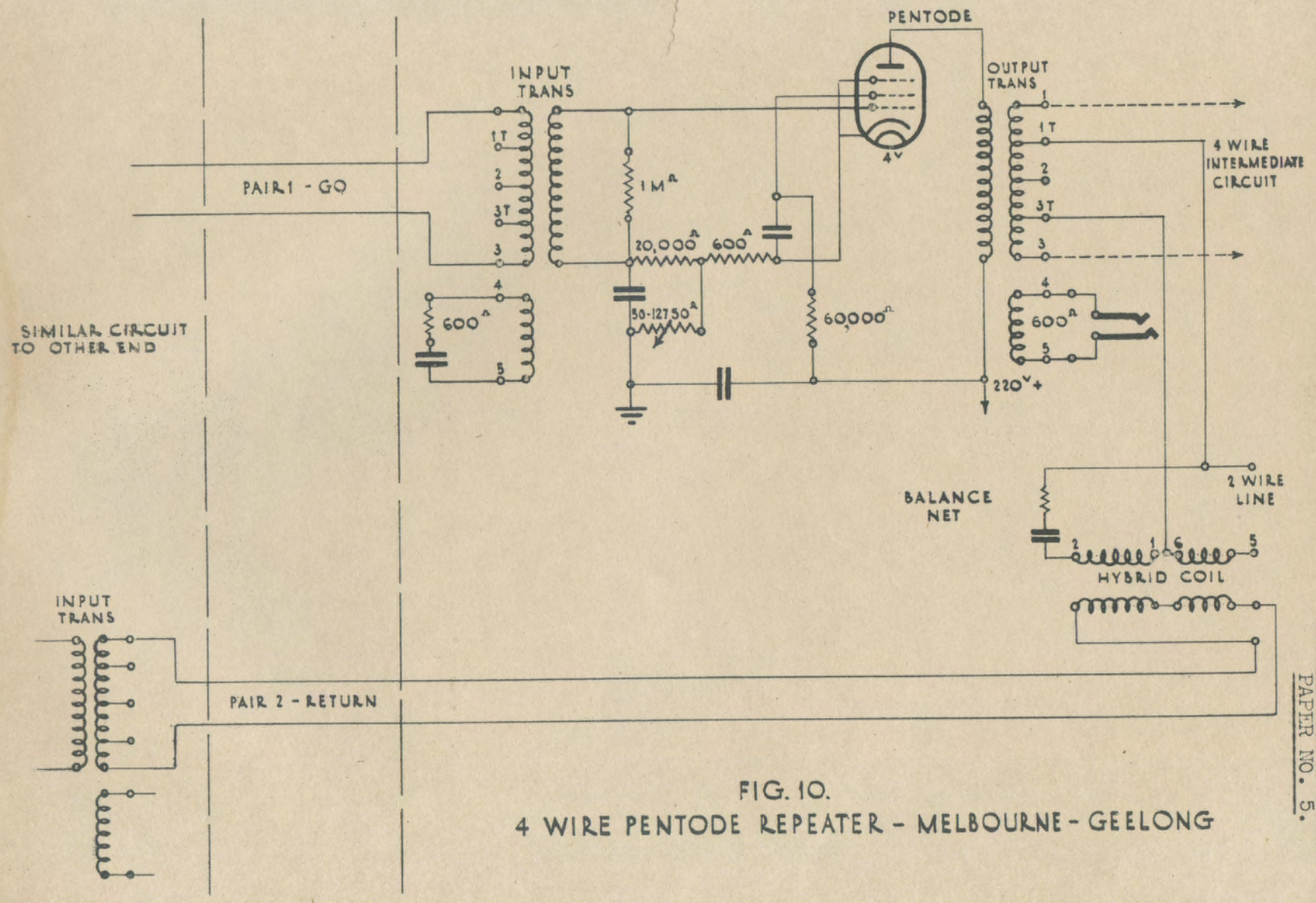

FIG. 10.

4 WIRE PENTODE REPEATER - MELBOURNE - GEELONG

COMMONWEALTH OF AUSTRALIA.

Chief Engineer's Branch,
Postmaster-General's Department,
Treasury Gardens,
Melbourne, C.2.

COURSE OF TECHNICAL INSTRUCTION.

LONG LINE EQUIPMENT.

CONTENTS:

1. VOICE FREQUENCY SIGNALLING SYSTEM.

2. 1000 CYCLE CURRENT SUPPLY.

3. TESTING.

4. SIGNALLING SYSTEMS IN USE.

5. TEST QUESTIONS.

1. VOICE FREQUENCY SIGNALLING SYSTEM.

1.1 The voice frequency (1000 cycle) signalling system may be used in connection with any type or combination of trunk lines, carrier telephone or radio systems. Its principal use at present is on the longer trunk lines and the type C carrier telephone systems where none of the other ringing systems may well be employed.

1.2 In this system operation of the ringing key by the operator causes a 1000 cycle current interrupted at a 20 cycle rate to be sent out over the line. At the distant end, this current is received and made to operate a series of relays which connect a local 20 cycle current to the proper switchboard circuit. The ringer circuits used at each end of the line are similar to each other, being arranged for two-way operation. No intermediate voice frequency ringers are needed, because the trunk telephone repeaters used for amplifying the voice currents serve equally well to amplify the 1000 cycle signalling current since the latter frequency is in the middle of the voice frequency range - hence the name "Voice Frequency Signalling System".

/ 1.3

1.3 Figure 1 shows how the 1000 cycle ringer is connected between line and switchboard. When the telephonist rings via the jack or "Drop" side of the ringer, relay HR is operated through the 20-cycle tuned circuit bridged across the line. The switchboard is thus disconnected from the trunk line by the cut-off relay (COR) whilst the line relay (LR) applies interrupted 1000 cycle current to the line. (In some ringers the COR terminates the switchboard in 5000 ohms in parallel with the 20 cycle branch, and terminates the line in 730 ohms in parallel with the 1000 cycle branch.) The distant terminal ringer receives this current in its 1000 cycle receiving circuit, energising relay TR which in turn operates the cut-off relay and drop relay (DR). The latter applies normal 20 cycle ringing current to the switchboard. As far as the operator is concerned the procedure is similar to ordinary ringing, except that code ringing is not possible.

1.4 Figure 2 shows a schematic of a V.F. ringer used at the terminal of a type C carrier current telephone installation. On the drop side of the modulators and demodulators, all channels are regular voice frequency so, as far as the ringers are concerned, they are operating on an ordinary voice frequency circuit. For ringing out in a given channel, the local operator's ringing key sends 20 cycle current through the 20 cycle receiving circuit causing operation of the cut-off, switching, and line relays. The first mentioned removes the drop and its balancing network from either end of the hybrid coil. The balancing network must, of course, be also removed from the other end of the hybrid to prevent unbalance. Operation of the switching relay connects the 1000 cycle ringing current to the primary windings of the hybrid coil. Arriving at the modulator this ringing current is stepped up in frequency by an amount determined by the frequency of the carrier current used for transmission in that channel. It is then amplified by the transmitting amplifier and sent to line. Resistance R1 and R2 are used to reduce the output of the ringer to prevent overloading the modulator.

1.5 A ringing signal from the distant terminal will arrive as a high frequency wave at the demodulator, due to the selective action of the line, directional and demodulator filters. In the demodulator the action of the distant modulator is reversed, the ringing signal is reduced to its normal frequency of 1000 cycles and flows through the hybrid coil and line relay contacts to the 1000 cycle receiving circuit. The resulting operation of the cut-off and drop relays sends 20 cycle current to the switchboard and prevents it from getting out on the line.

/ 1.6

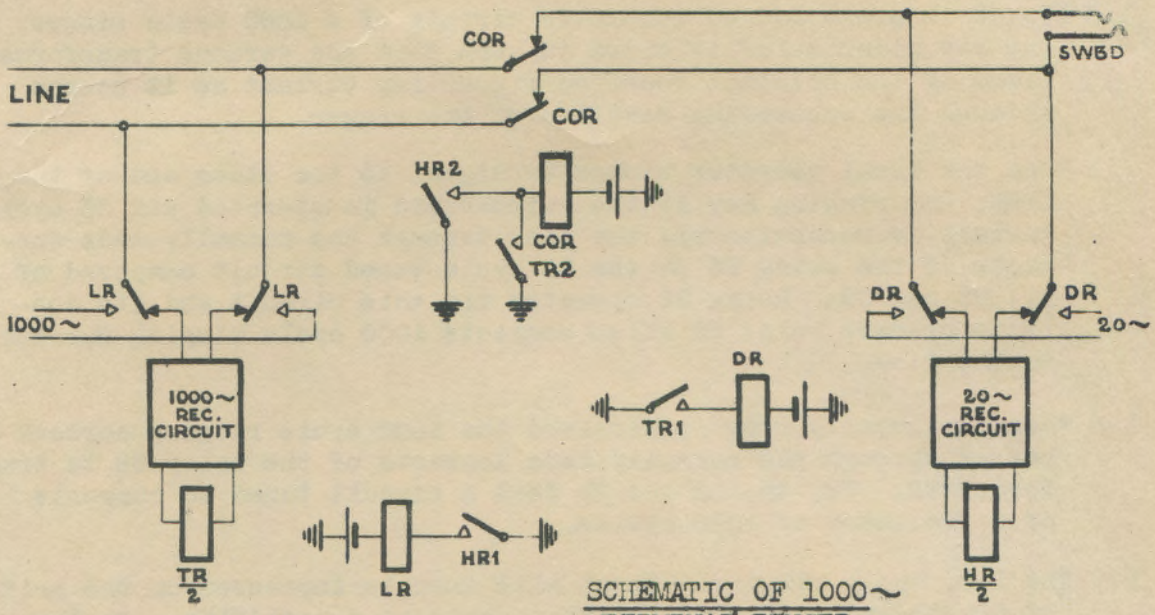

SCHEMATIC OF 1000~ TERMINAL RINGER
FIG. 1.

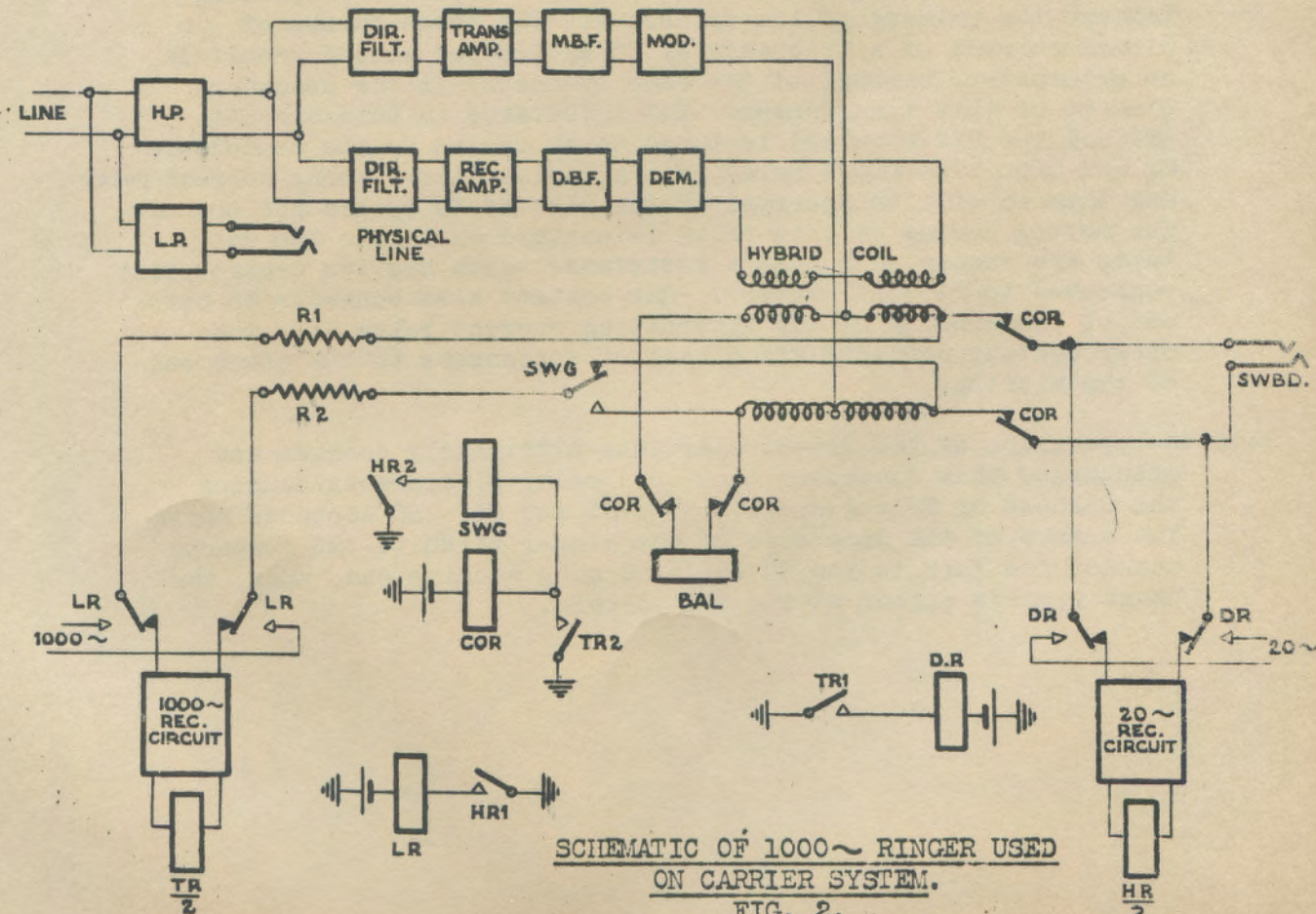

SCHEMATIC OF 1000~ RINGER USED ON CARRIER SYSTEM.
FIG. 2.

1.6 Fig. 3 is a simplified schematic circuit of a 1000 cycle ringer. The key given below it shows in wave form the various transformations of the original received signalling current as it passes through the succeeding sections of the ringer.

1.7 When the local operator wishes to signal to the other end of the line, the ringing key at the switchboard is operated and 20 cycle current is connected via the jack through the normally made contacts of the relay S6 to the 20 cycle tuned circuit composed of L1, S2 and C9. Relay S2 operates via this circuit and its contacts operate relay S8 which connects 1000 cycle ringing current to the line.

1.8 When an incoming ring is received the 1000 cycle ringing current passes through the normally made contacts of the relay S8 to transformer T3. T3, C8, L2 and T1 form a circuit tuned to currents of a frequency of 1000 cycles.

1.9 The 1000 cycle ringing current will then be impressed on the grid of the thermionic valve V1, which acts as a rectifier. In the anode circuit of this valve the positive portions only of the original alternating current signals will appear. In passing through the primary of the transformer T2, these pulses of direct current of a frequency of 20 cycles per second result in an alternating current of the same frequency in the secondary circuit of this transformer. The inductance in this circuit (T2 and the 215-B relay) is tuned to 20 cycles by the condensers C1 and C10. The 215-B relay is a polarised alternating current relay and thus it will be operated at the rate of 20 cycles per second. The moving spring of this relay is earthed while the two contacts are connected across a resistance which has its centre point connected to 24 volt battery. One contact also connects to one end of the winding of the alternating current relay S1. The other contact connects via a bank of condensers to the other end of the winding.

1.10 The operation of the 215-B relay thus alternately charges and discharges this condenser bank, and relay S1 operates causing the release of S3 and operation of S5 and S6. S5 contacts earth the sleeve of the drop side of the ringer circuit. S6 contacts connect the jack to the 20 cycle ringing machine and, thus, the usual signals appear at the switchboard.

/ 1.11

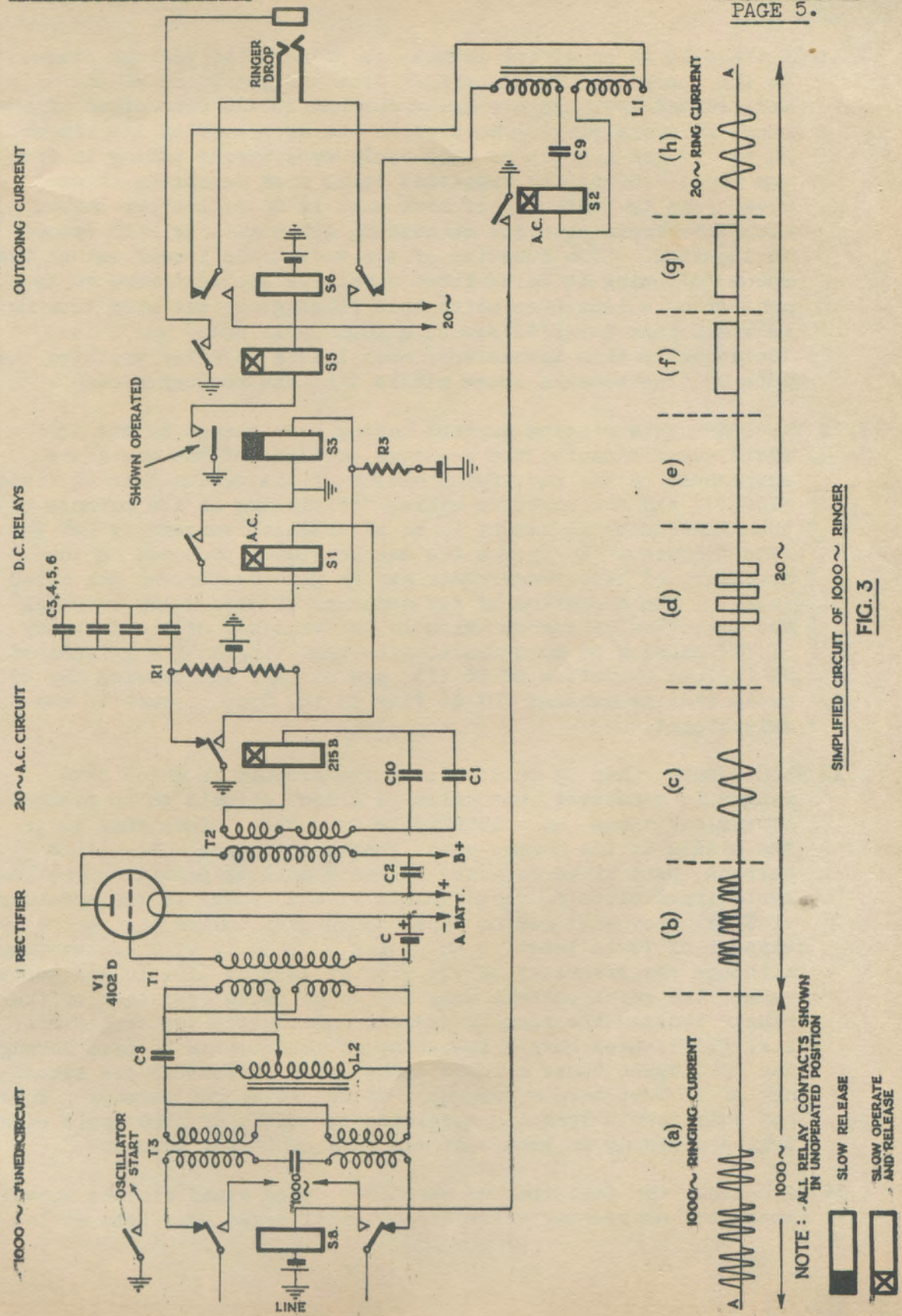

SIMPLIFIED CIRCUIT OF 1000~ RINGER

FIG. 3

1.11 On the axis AA an effort is made to picture the various stages in the operation of this ringer from the reception of the interrupted 1000 cycle ringing current to the connection of the local 20 cycle ringing machine to the drop side of the ringer. At "a" we see a group of 1000 cycle wave trains coming in from the line. Since the frequency (time from beginning of one wave train to beginning of next one) is 20 cycles per second, each wave train with its succeeding space will be 1/20 second in duration. The duration of the wave train itself and of the space following it being about equal, we see that were we to monitor on a line over which this ringing current were flowing we would hear for 1/40 second a 1000 cycle note, and so on. Incidentally this sounds very much like a whistler trilling the note C^2 (two octaves above middle C on the musical scale).

1.12 The 1000 cycle ringing current having been passed by the 1000 cycle tuned circuit, the negative portions of the waves are suppressed by the rectifying action of the vacuum tube V1 (type 4102-D), and the positive halves "b" flowing in the primary of the transformer T2 result in an alternating current "c" of the same frequency (20 cycles per second) being produced in the secondary of this transformer and so passing through the 215-B relay. The operation of the armature of this relay reverses the direction of current flow in the windings of the AC relay S1 (d) causing it to operate, this resulting in the release of S3 (e) and operation of S5 (f), and S6 (g), and causing the 20 cycle ringing current (h) to flow in the drop circuit to the switchboard.

1.13 When a subscriber is talking over the circuit to which this ringer is connected, his voice is almost certain to be pitched at various times, at a 1000 cycle frequency, since this is in the middle of the normal voice frequency range. When this happens, part of these voice currents will be passed by the 1000 cycle tuned circuit, rectified in V1 and appear in the secondary of T2. They will get no further, however, since the secondary circuit of T2 is tuned to 20 cycles. Thus it will be seen that although the frequency of the ringing current lies in the voice range, the voice current will not cause false operation of the ringer because the ringing current must fulfil two conditions; i.e. (1) it must have a frequency of 1000 cycles to pass through the 1000 cycle tuned circuit and (2) the current in the secondary of T2 must have a frequency of 20 cycles per second. This can only result from the rectification in V1 of 1000 cycle wave trains arriving in groups at the rate of 20 per second.

1.14 Of course, the fact that we have 1000 cycle tuned circuit normally connected across our voice circuit will cause some loss at the

/ 1000

1000 cycle frequency. The ringer circuit has a sufficiently high impedance, however, even at its resonant frequency, to cause a loss of only about .2 db. At all other frequencies the loss is negligible.

1.15 The range of the voice frequency signalling system over a given circuit is, of course, the same as for the satisfactory operation for voice signals. The current sent out on the line by one of these ringers is normally about 5 milliamperes (.005 amps) excepting where the ringer output goes directly to a thermionic valve input circuit (such as a terminal repeater or carrier current system), in which case the ringer output is reduced by resistances to prevent overloading the tubes.

2. 1000 CYCLE CURRENT SUPPLY.

2.1 Voice frequency ringing current is usually supplied by small generator units, producing 1000 cycle current at 6 volts, which is interrupted at a frequency of 20 cycles per second by a mechanical interrupter mounted on the generator shaft. Circuits for measuring and regulating the output are provided. In offices equipped for automatic filament current regulation, the generator control can be made automatic. Each motor generator unit is equipped with a ring type regulator set to maintain the proper speed to $\pm$ 2% of normal value. In the case of an installation of only a few ringers, the 1000 cycle current may be supplied by a valve oscillator and interrupted by a relay operating from the 20 cycle source in the office. In such cases a spare oscillator is furnished and in all cases at least one spare ringer is supplied to insure continuity of service. Since a 4102-D thermionic valve is used in each ringer, 24 volt filament and 130 volt plate circuits are a part of the ringer installation.

3. TESTING.

3.1 The testing circuit used in connection with voice frequency ringers consists of an arrangement of keys and networks which may be patched to the ringer under test by means of testing trunks. These networks are so arranged that the ringer may be operated to relay a signal in either direction under conditions similar to those which the ringer must meet in service. This testing circuit is also equipped with a meter, potentiometer and network which are used to control the current flowing through the windings of either the AC relay S2 in the 20 cycle receiving circuit, or the polarised relay (type 215-B) in the voice frequency circuit, while adjusting these relays. A dial

/ and

and relay circuit is provided to measure the time required to operate the train of relays in the 1000 cycle circuit. The 215B relay is tested by means of two lamps, one connected to each front and back contacts. On operating the relay by 20 cycle current the lamps will glow from battery supplied via the armature. The relative brightness of the lamps indicates the amount of relay contact.

4. SIGNALLING SYSTEMS IN USE.

4.1 The foregoing description covers the standard voice frequency signalling unit which transmits interrupted 1000 cycle tone to line and delivers 20 cycle ringing current to the switchboard. This class of ringer can be used for signalling either over physical lines or carrier systems. In the carrier system the interrupted 1000 cycle tone is used to modulate the carrier frequency which is demodulated again at the distant end. On a physical line the interrupted 1000 cycle tone is transmitted direct to line. 1000 cycle ringers are necessary on physical lines which are equipped with voice frequency repeaters. The application of a voice frequency repeater to the circuit limits the frequency band strictly to the commercial voice range, and, in consequence, straight out 20 cycle ringing is impossible.

4.2 There are many other voice frequency ringing systems in use, but all follow the general principle that ringing current of 18 to 20 cycles from the switchboard operates relays which transmit a voice frequency to line.

4.3 Variations occur on different carrier systems as to the manner in which the carrier frequency is modulated with the voice frequency signal. Some systems use a fixed tone for signalling, whilst others adhere to interrupted tone. In some cases the interrupted tone is fed into a modulator over the voice path as on the S.T.C. 3-channel system, whilst on others the effect of modulation is achieved by shifting the carrier frequency by 500 or 1000 cycles and at the same time unbalancing the carrier so that it goes out to line. Upon demodulation a voice frequency tone is produced. One system at present being used experimentally modulates the carrier with a fixed 1000 cycle tone, but interrupts the outgoing modulated carrier at 17 cycles per second by means of a pair of relay contacts bridged across the modulator output filter.

4.4 In addition to voice frequency ringing circuits, experiments have been made from time to time with voice frequency dialling systems, and these in the near future will replace a large number of voice frequency ringers. The system to be introduced will make use

/ of

of two tones arbitrarily designated X and Y, and having frequencies of 750 and 600 cycles. Generally speaking, the "X" tone will be used to set up a connection and the "Y" tone to release it.

5. TEST QUESTIONS.

1. Describe with diagrams the action of a voice frequency ringing system.

2. The voice frequency ringer operating an interrupted 1000 cycle tone has been found to take .7 of a second to operate. Can you explain the reason for this delay and, if so, at what part of the circuit does it occur?

3. Draw a wave diagram indicating the various changes which take place in a signal transmitted over a voice frequency signalling system.

4. From your knowledge of valves used in departmental plant as described in previous papers, what would you consider to be the requirements of a valve suitable for use in a voice frequency ringer? Draw an approximate characteristic curve of the valve you would recommend.

5. What power supply would you require to operate a group of voice frequency ringers, and approximately how much current would each ringer require. On what basis do you form your estimate?

6. What is the function of the 215B polarised relay in the 1000 cycle ringer?

END OF PAPER.

COMMONWEALTH OF AUSTRALIA.

Chief Engineer's Branch,
Postmaster-General's Department,
Treasury Gardens,
Melbourne. C.2.

COURSE OF TECHNICAL INSTRUCTION.

LONG LINE EQUIPMENT.

CONTENTS:

1. CARRIER SYSTEMS - REASONS FOR DEVELOPMENT.
2. FUNDAMENTALS OF CARRIER TRANSMISSION.
3. REQUIREMENTS FOR PRACTICAL USE.
4. TRANSMISSION REQUIREMENTS OF DIFFERENT CARRIER SYSTEMS.
5. METHODS OF MODULATION AND DEMODULATION.
6. VOLTAGE LIMITERS.
7. GENERATION OF CARRIER FREQUENCIES.
8. AMPLIFIERS.
9. LINE CONSIDERATIONS AND EQUALISATION.
10. PILOT EQUIPMENT AND SIGNALLING ON CARRIER SYSTEMS.
11. REPEATERS.
12. TYPES OF SYSTEMS IN USE.
13. TEST QUESTIONS.

1. CARRIER SYSTEMS - REASONS FOR DEVELOPMENT.

1.1 In general, external plant costs greatly exceed the exchange and substation plant costs. This difference in cost is most marked for trunk circuits and it is, therefore, necessary to adopt methods which will allow of the maximum use of a trunk circuit before resorting to additional line plant construction.

1.2 In view of the relatively high external plant costs, it has always been the aim of telecommunication engineers to make a telephone circuit carry more than one telephone conversation at the one time.

/ The

The first example of this was the development of phantom telephone circuits derived from the physical speech circuits. Further research led to the development of carrier working in which, by utilising carrier frequencies, several speech channels can be obtained from one pair of wires.

1.3 The early developments in carrier working were single and 3 channel types, these derived speech channels being additional to the normal voice frequency speech channel. In recent years 12 and 17 channel systems have been developed and installed, and experiments made to date indicate that the ultimate limit in the number of carrier channels it is possible to derive from one pair of physical wires has not yet been reached.

2. FUNDAMENTALS OF CARRIER TRANSMISSION.

2.1 A commercial channel for the interchange of signals (whether of speech, music, telegraph, picture, or television) between two places must be capable of transmitting a certain band of frequencies, the band width varying according to the purpose for which the channel is required. For the transmission of speech of commercial quality the band of frequencies from 300 cycles per second to 2600 cycles per second is sufficient. To avoid confusion in the following description of carrier working the word "audio" will be used to refer to this band of frequencies. The word "voice" will be used to refer to the same band of frequencies, but only when the signal currents traverse the circuit without change of frequency as, for example, in an ordinary voice frequency telephone circuit.

2.2 When a conversation takes place over an ordinary telephone connection the alternating electric currents which are transmitted over the circuit are of the same frequency as the corresponding sounds in the speaker's voice. An open wire line or an unloaded cable circuit is capable of transmitting frequencies higher than the highest audible frequency. However wide the range of frequencies which can be transmitted without undue attenuation may be, only the range of normal speech frequencies can be used for speech purposes so long as the ordinary system of transmission is used. The fundamental basis of carrier telephony is to transmit speech by means of currents in a band of frequencies different from that of the speaker's voice, and so obtain more than one speech channel from each physical circuit. The derivation of the term "carrier working" arose from the conception that the high-frequency current sent to line was considered to be carrying the low-frequency voice current.

2.3 The fundamental steps which are involved in effecting carrier transmission of either telephone or telegraph messages are as follow:-
(a) Generating each of the relatively high frequency currents to be used as carriers and furnishing thereby the carrier supply.

/ (b)

(b) Impressing upon each carrier the variations of the telephone or telegraph currents.
(c) Transmitting the carrier currents over the line.
(d) Separating the several carrier currents at the receiving terminal on the basis of their differences in frequency, thus rendering multiplex operation possible.
(e) Restoring at the receiving end the original characteristic of the individual message so that it may be received on a sounder if desired in the case of telegraphy, or in the ordinary telephone receiver in the case of telephony.

2.4 The carrier currents used can be generated by a number of methods, the most familiar one being the use of thermionic valves operating as oscillators. The frequency of the oscillator output depends on the electrical constants of the oscillator circuit, and by adjusting these constants any desired frequency can be obtained.

2.5 In order to understand what takes place in carrier working, it is essential to appreciate the process of modulation. Modulation may be broadly defined as the process of impressing the audio frequency currents from a subscriber's telephone on to the carrier frequency currents so that other carrier frequency currents are produced which carry the intelligence over the circuit. Similarly, demodulation is the process of separating the audio frequency currents from the transmitted carrier frequency currents at the receiving end of the circuit so that they may be intelligible to the listener.

The method of transmitting speech by means of a high frequency current the amplitude of which is varied in accordance with the wave form of the current from the telephone transmitter and its re-conversion to audio frequencies at the receiving end may be carried out in a number of ways. The simplest scheme is to include a telephone transmitter in series with a carrier frequency generator as indicated in Fig. 1. When the transmitter is spoken

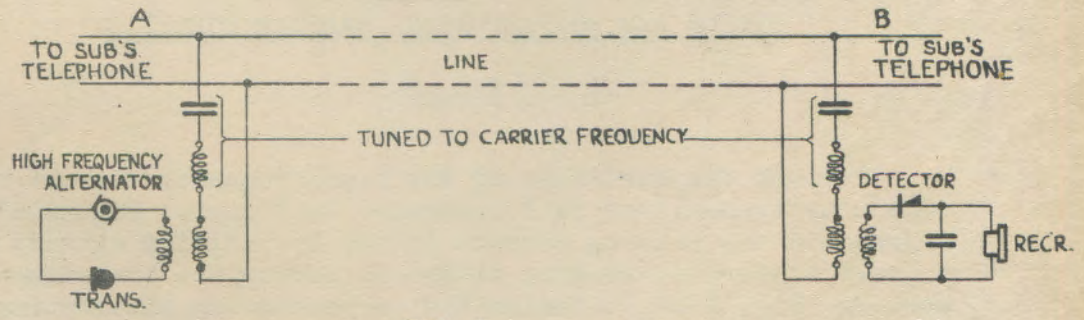

FIG. 1.
PRINCIPLE OF SIMPLE CARRIER CCT.

into its varying resistance causes variations in the strength of the high frequency alternating current in a similar manner to the

/ variation

variation of the direct current in the ordinary substation telephone circuit. The varying high-frequency currents are passed to line through the transformer and tuned circuit.

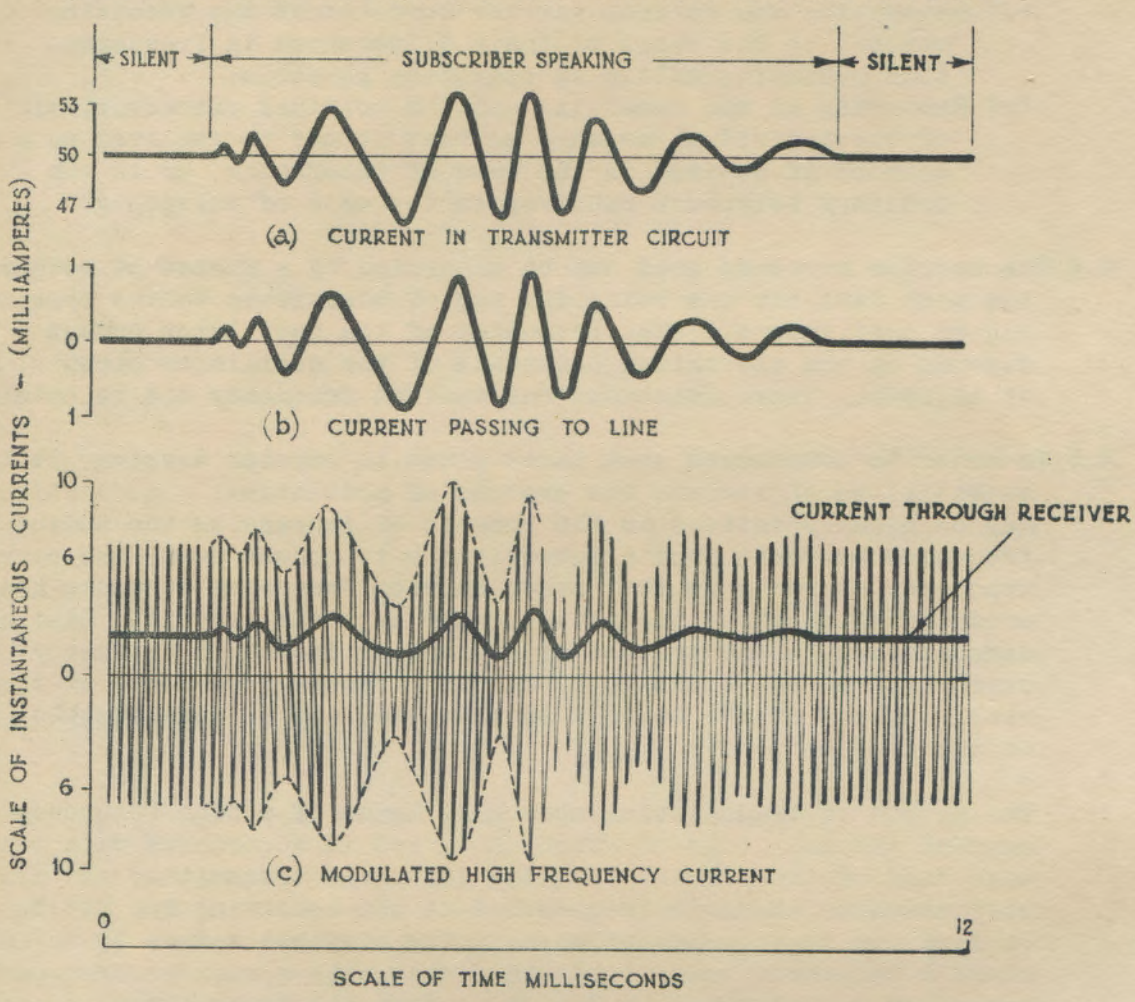

SPEECH AND CORRESPONDING CARRIER CURRENTS.

FIG. 2.

2.7 The effect of the variation of the high-frequency current by the telephone transmitter is illustrated in Fig. 2. Fig. 2(a) represents the varying current in the transmitter circuit of a local battery substation telephone during the transmission of speech. Fig. 2(b) indicates the corresponding alternating current transmitted over the line. The transmitter in the high-frequency circuit of Fig. 1, acted upon by the same sound waves, would vary the amplitude of the high-frequency current as indicated in Fig. 2(c). It should be noted that the "envelope" of the high-frequency wave corresponds to the speech current curves of Figs. 2(a) and 2(b).

/ If

If the carrier frequency current represented in Fig. 2(c) were transmitted over the line and passed direct to a telephone receiver, the original speech would not be heard. Detection or, in other words, demodulation is necessary to convert the received signals back into the original speech. Considering Fig. 1, if the rectifier shown in the receiving circuit were a perfect rectifier, the positive half-waves would be passed freely, whereas the negative half-waves would be suppressed. Thus, instead of an alternating current, a unidirectional current of fluctuating value would pass through the rectifier, and the comparatively slow-varying average value of this current would correspond to the original speech wave. The high-frequency components find a low impedance path through the condenser shunting the receiver, and the current through the receiver, corresponding to the original transmitted speech, is indicated by the full line of Fig. 2(c). Although special significance should not be attached to the actual values of the currents in Fig. 2, an attempt has been made to indicate reasonable values.

2.8 Fig. 1 thus represents a circuit which can transmit speech in the direction A to B, and transmission in the opposite direction could be effected in a similar way, provided currents of different carrier frequencies were used in each direction. The resonant circuits tuned to the carrier frequencies prevent the generating circuit from shunting the receiving circuit and vice versa. The presence of small condensers in the tuning circuits prevents interference between the high-frequency circuits and the ordinary voice-frequency telephone circuit on which the high-frequency circuits are superimposed.

The possibility of transmitting more than one additional conversation simultaneously in the manner just described was early appreciated, but carrier systems on a commercial basis were not produced until the development of electrical wave filters had advanced sufficiently to permit the effective separation of the various frequencies.

The method shown in Fig. 1 is not used in practice, since it involves placing the subscriber's transmitter in series in the carrier line. Consequently, practical carrier systems must be designed so that existing subscribers', junction and trunk lines may be connected to them. The actual modulation must, therefore, take place at the junction of the local line and the carrier system, i.e., in the carrier equipment.

3. REQUIREMENTS FOR PRACTICAL USE.

3.1 Sidebands. For a proper conception of the operation of carrier systems, it is necessary to give some account of the "sideband" frequencies which are produced when a carrier wave is modulated by a voice-frequency wave.

/ 3.2

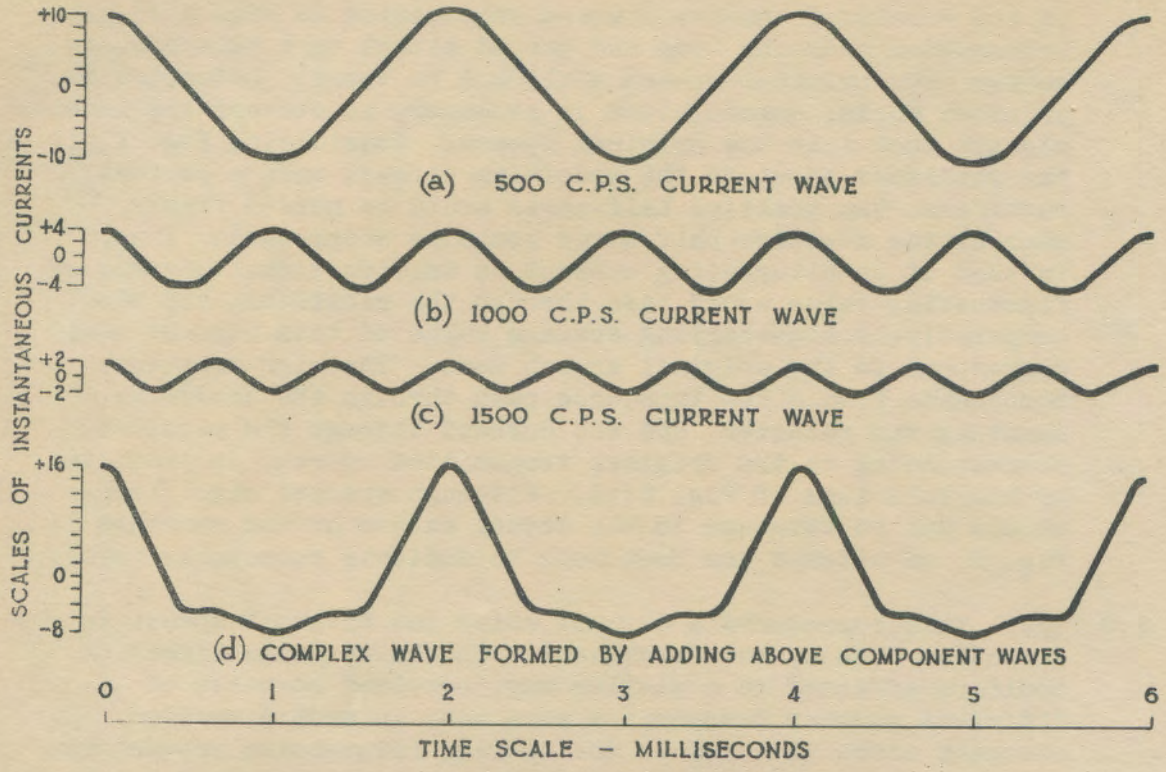

COMPONENTS OF COMPLEX WAVE.

FIG. 3.

3.2 The diagrams in Fig. 2 are intended to represent the transmission of complex waves which occur in speech, but any such complex wave can be considered as the sum of a number of simple sine waves. Thus, in Fig. 3, the peaky 500 cycles per second wave, which is shown at (d), can be formed by adding together the instantaneous values of current represented by the simple 500, 1,000 and 1,500 cycles per second waves shown at (a), (b) and (c) in the diagram. These are sine waves.

A mathematical analysis of the modulated wave is dealt with in Fourier's Theorem, which proves that a complex wave may be split up or resolved into a number of simple sine waves of differing frequencies.

Ordinary voice sounds are a combination of simple sine waves, as explained above, and the operation of modulation may, therefore, be explained by a consideration of what takes place when one single frequency is modulated by a carrier frequency. Assume that the carrier

/ frequency

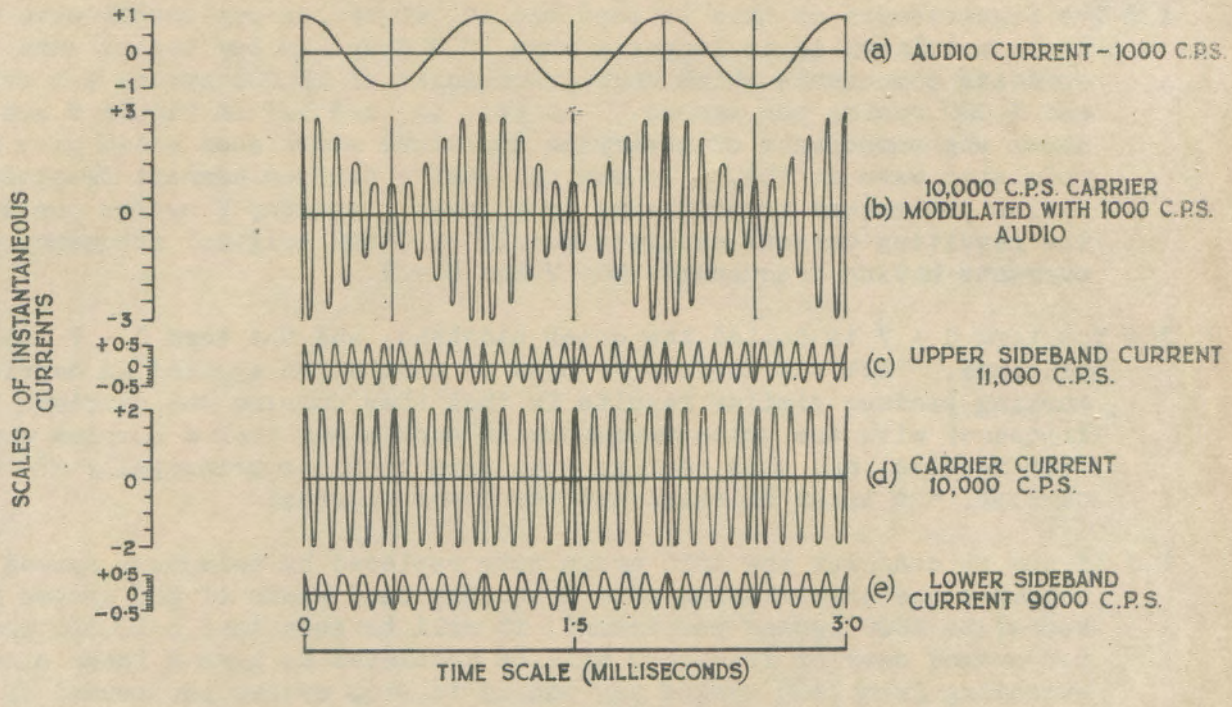

PRODUCTION OF SIDE BANDS.

FIG. 4.

frequency is 10,000 cycles per second, and that instead of speech a 1,000 cycle note is sounded in front of the transmitter, then a complex wave of the form shown in Fig. 4 (b) will be sent to line after modulation. This wave, when analysed, is found to consist of three main frequencies -

10,000 cycles,
10,000 plus 1,000, i.e., 11,000 cycles,
10,000 minus 1,000, i.e. 9,000 cycles,

i.e., the complex wave is made up mainly of -

(a) The carrier frequency;

(b) The sum of the carrier and the voice frequencies;

(c) The difference of the carrier and the voice frequencies.

3.3 The significance of this is that the 10,000 cycles per second wave when it is modulated is no longer a pure 10,000 cycles per second wave, but contains components which have frequencies of 11,000 cycles per second and 9,000 cycles per second. At (c), (d) and (e) in Figure 4 are shown the components of unvarying amplitude which when added give the modulated wave at (b). To sum up, when a carrier current frequency C cycles per second is modulated by a lower frequency V cycles per second, the resulting current consists mainly of C the original frequency and currents having frequencies C + V and C - V.

3.4 The term C + V is called the upper sideband, and the term C - V the lower sideband. All the various methods of modulation applied in carrier working produce similar results in that they combine the carrier frequency with the voice frequency in such a way that a complex wave form results, and this complex wave form consists principally of the carrier, the upper sideband and the lower sideband.

3.5 If now we consider the 1000 cycle note replaced by telephone speech which requires the transmission of a frequency band width of 300 cycles per second to 2600 cycles per second, it will be seen that a 10,000 cycles per second carrier frequency will be modulated to give a lower sideband extending from 7400 cycles per second to 9700 cycles per second (i.e. 10,000 - 2,600 to 10,000 - 300) and an upper sideband extending from 10,300 cycles per second to 12,600 cycles per second. The transmission of high quality speech and music requires a much wider band width than the above to give satisfactory reception.

3.6 Filtering. A brief outline has now been given showing how the voice frequency currents normally used in a telephone conversation can be changed in frequency to enable bands of frequencies other than the natural band width of the voice to be used for the transmission of speech. Where conditions are suitable a pair of open wires may have an effective frequency range extending up to 40,000 cycles per second or more and still keep reasonable attenuation.

This is many times the band width necessary for normal telephone speech and suitably designed electrical wave filters can be used to divide the frequency range available into a number of independent channels each of which can be used for the transmission of speech.

3.7 The electrical filters are of three general types:-

(1) High Pass Filter.
(2) Low Pass Filter.
(3) Band Pass Filter.

Detailed information of the characteristics of the various types of filters is contained in Paper No. 4.

/ 3.8

3.8 The functions of the filters employed in carrier working may be briefly stated as follows -

(a) The carrier currents must be effectively separated from the voice frequency currents in the physical circuit on which the carrier system is superimposed.

(b) When different carrier frequencies are employed for transmission in each direction, filters are required for separating these frequencies and directing them into their respective transmitting and receiving circuits.

(c) In a multi-channel carrier telephone system, the currents of the several channels have to be separated into their appropriate channels at the receiving end, so that each conversation may be directed to its own equipment.

The arrangement of the various filter groups in carrier telephone systems is indicated in the following notes.

3.9 Line Filters. The carrier frequencies are separated from the voice frequencies of the physical line by a line filter group consisting of a high pass and a low pass filter with a cut-off frequency of approximately 3 kilocycles per second. A block schematic diagram of this line filter group arrangement is shown in Fig. 5. In some instances, line filter groups having a cut-off frequency of approximately 5.6 kilocycles per second are employed, in order that the circuit may be employed for the relay of broadcast programmes when desired.

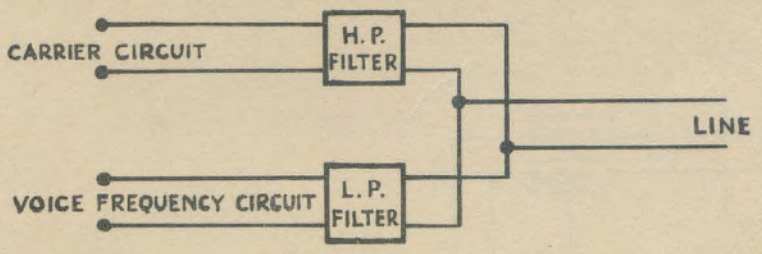

LINE FILTER GROUP.

FIG. 5.

3.10 Directional Filters. Since different frequency band widths are employed for each direction of transmission, a single channel carrier telephone system can be derived by using two different carrier frequencies, one for transmission in the A to B direction and the other for transmission in the B to A direction. This necessitates the use of filters for the separation of these carrier frequencies at the terminals. Such filters are known as Directional Filters, or more particularly as Transmitting Directional Filters and Receiving Directional Filters. The arrangement of these filters at a carrier terminal is shown in Fig. 6.

/ Fig. 6.

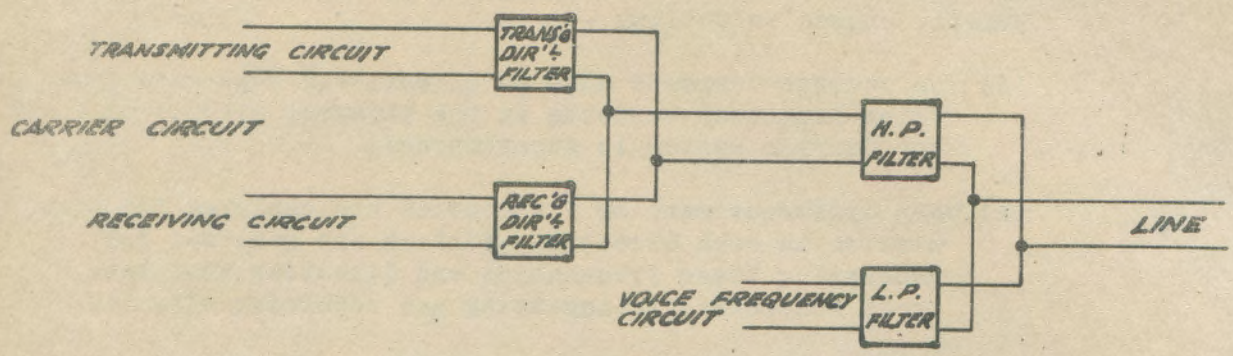

SEPARATION OF THE DIRECTIONAL FREQUENCY BANDS FOR CARRIER SYSTEM OPERATION.

FIG. 6.

3.11 Band Filters. - Multi-channel carrier telephone operation is made possible by employing further filter arrangements. A filter which is placed after the modulator in each channel is known as the Modulator Band Filter. The three M.B.F's of a 3-channel system are connected in parallel on their line sides. Each one will only pass the band of sideband frequencies which is to be transmitted to line.

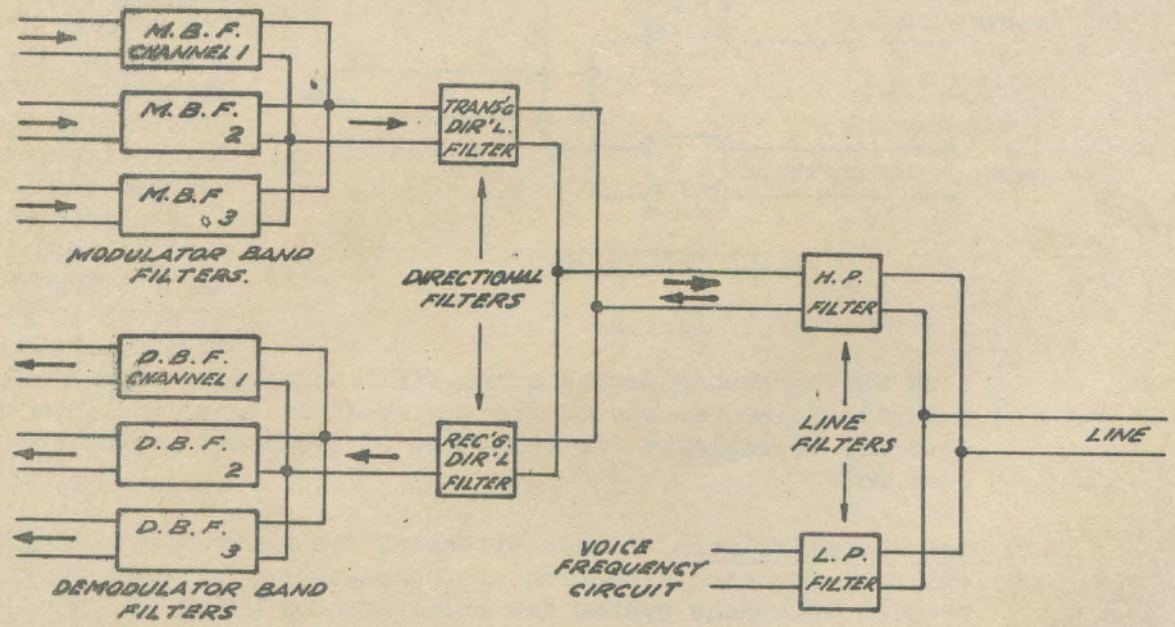

FILTERING ARRANGEMENTS OF A 3 CHANNEL SYSTEM.

FIG. 7.

/ Similarly

Similarly, on the "receive" side the incoming sidebands are separated by demodulator band filters before application to their respective demodulators. Fig. 7 shows the arrangement of the modulator and demodulator band filters at one terminal of a 3-channel system.

4. TRANSMISSION REQUIREMENTS OF DIFFERENT CARRIER SYSTEMS.

4.1 Single Sideband Transmission. The original audio intelligence can be reproduced at the receiving terminal by a combination of the carrier frequency and a single sideband (upper or lower) - hence the band of frequencies required for the transmission of speech by carrier telephony can be reduced by employing electrical filters to remove either the lower or the upper sideband frequencies.

4.2 It is possible to go a step further and filter out both the unwanted sideband and the carrier frequency, thus transmitting one sideband only to line. If this is done, it is necessary to inject the carrier frequency at the receiving end. The frequency of the injected carrier has to exactly match the frequency of the carrier at the sending end as a discrepancy of more than a few cycles per second will spoil the quality of the received speech.

4.3 The suppression of the carrier frequency at the transmitting end has several advantages which may be briefly discussed as follows:-

4.31 Where the carrier frequency is transmitted over the line the original audio currents are reproduced at the receiving terminal by the operation of the demodulator circuit, which reproduces the desired audio intelligence from the combination of the incoming carrier and sideband currents. The volume of the reproduced audio current depends on the amplitudes of the incoming sideband and carrier currents. Now, both these currents have to traverse the line and, in consequence, suffer all the disadvantages due to variations in line attenuation caused by varying line conditions. Thus, we have a condition where we are dependent on the combined effect of two currents, both of which are subject to wide changes in value. Consequently, if we could eliminate the variations due to these causes, it would be possible to get more stable operation. We cannot avoid the variations in the sideband currents, but by eliminating the necessity for transmitting the carrier a great improvement is obtained because the amplitude of the injected carrier at the receiving terminal may be made as high as required and it is not subject to line variations.

4.32 The effect of crosstalk increases as the frequency increases, and for this reason crosstalk at carrier frequencies becomes greater than at voice frequencies. Crosstalk can

/ be

be reduced to an extent by increasing the number of transpositions, but the suppression of the carrier greatly reduces the amount of power transmitted to line, and thereby assists in reducing crosstalk.

4.33 When the carrier and one sideband are suppressed, the transmitted sideband occupies a band of frequencies equal to that of the original voice frequency. Thus, if speech containing frequencies ranging from 300 to 2,600 cycles per second is employed to modulate a 10,000 cycles per second carrier frequency and the lower sideband only is transmitted, the frequencies will range from 7,400 to 9,700 cycles per second and the band width will be 2,300 cycles per second, which is the same band width as the original speech. If the carrier and both sideband frequencies were transmitted to line, the band width would extend from 7,400 to 12,600 cycles per second. Thus, by suppressing the carrier and one sideband, the best use is made of the available frequency spectrum.

4.4 Demodulation. At the receiving end of a carrier system, it is necessary to produce from the high-frequency carrier currents the original audio current impressed during the process of modulation at the transmitting end. This process of restoration is termed demodulation, and it can be regarded as the inverse of modulation in the sense that it gives back an audio wave from the high-frequency carrier current. In its actual circuit arrangement of components, it is the same as modulation. The similarity may be most readily seen in the case of lower sideband transmission. The lower sideband was obtained at the sending end by selection from the products of modulation. Similarly, at the receiving end, the audio intelligence is obtained by selection from the products of demodulation.

For example, considering the carrier C and the sideband C - V applied to a demodulator, then these two frequencies will be combined and the main products after demodulation will be -

$$C = \text{The carrier frequency;}$$
$$C + (C - V) = \text{The carrier frequency plus the sideband frequency;}$$
$$C - (C - V) = V = \text{The original audio-frequency.}$$

Of these, V is the reproduction of the original audio-frequency at the sending end and is the only one required for the operation of the system. Remaining unwanted frequencies are suppressed by a low pass filter, which only passes the frequencies 200 to 2,600 cycles per second.

4.5 Methods of Securing Both-Way Communication. In the commercial application of carrier telephony, it is nearly always essential to arrange for speech to be possible in both directions, neglecting for the moment the physical medium on which the carrier circuits are superimposed. A / complete

complete carrier channel may be regarded as a "4-wire" circuit having a "go" and a "return" line. These lines are combined at the ends so that they may be connected to the ordinary 2-wire telephone system.

In a similar manner, as applied to 4-wire voice-frequency repeater circuits, the gains and losses of the carrier system must be so adjusted that singing does not occur around the loop formed by the "go" and "return" halves of the circuit.

4.6 There are three ways of meeting this essential condition -

(a) Grouped system.
(b) Balanced system.
(c) 4-Wire Carrier working.

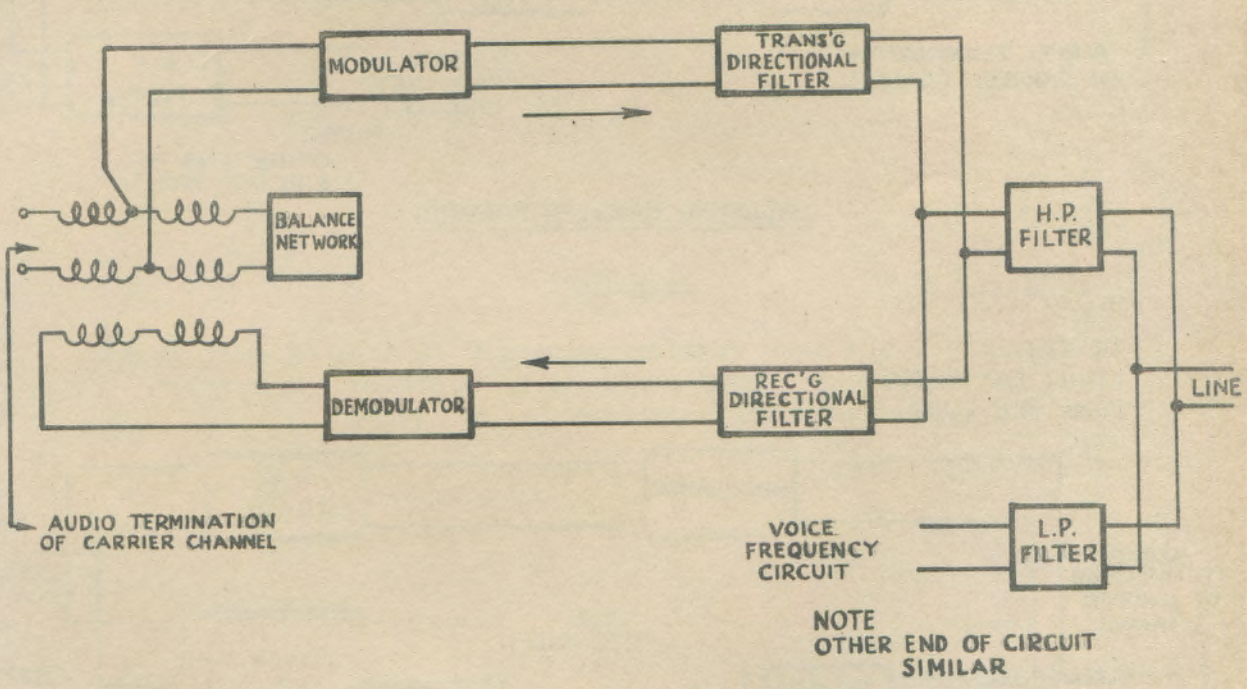

GROUPED CARRIER WORKING.

FIG. 8(a).

The three methods of working are illustrated in Fig. 8. In Fig. 8(a), the "go" and "return" carrier frequencies are different and are separated by high and low pass filters. In Fig. 8(b), the same carrier frequency is employed in each direction, and

/ singing

singing round the loop is prevented by the hybrid coil. The hybrid coil is provided with a balance network accurately simulating the line impedance at the carrier frequency.

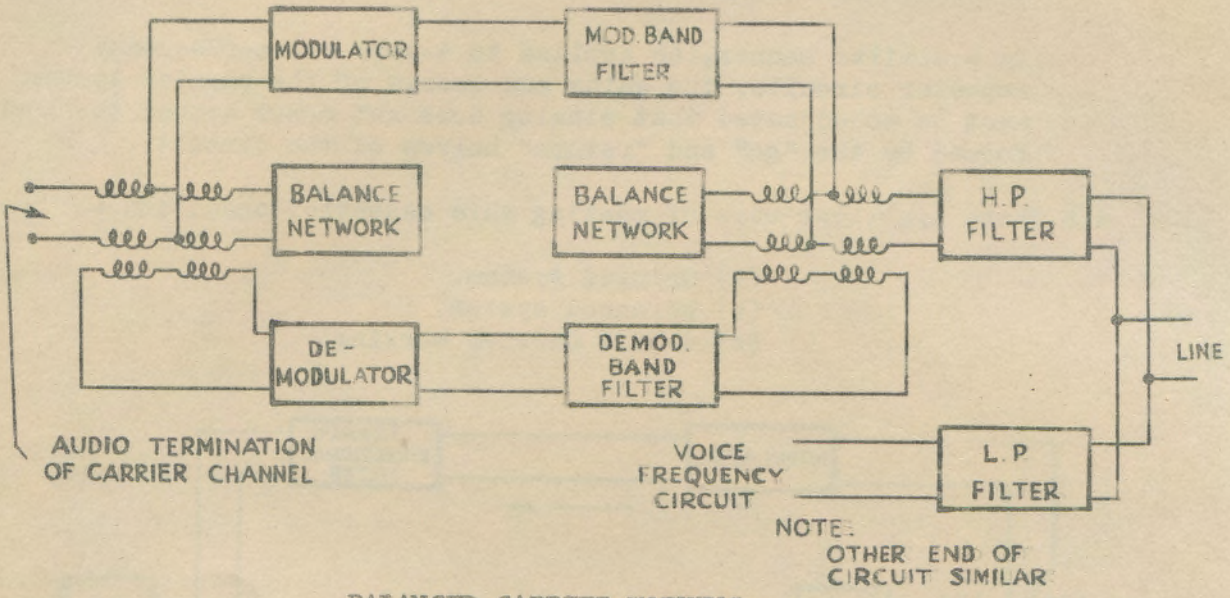

BALANCED CARRIER WORKING.

FIG. 8(b).

In Fig. 8(c), the same carrier frequency is used in each direction, and filters are only required to separate the carrier from the voice-frequency circuits.

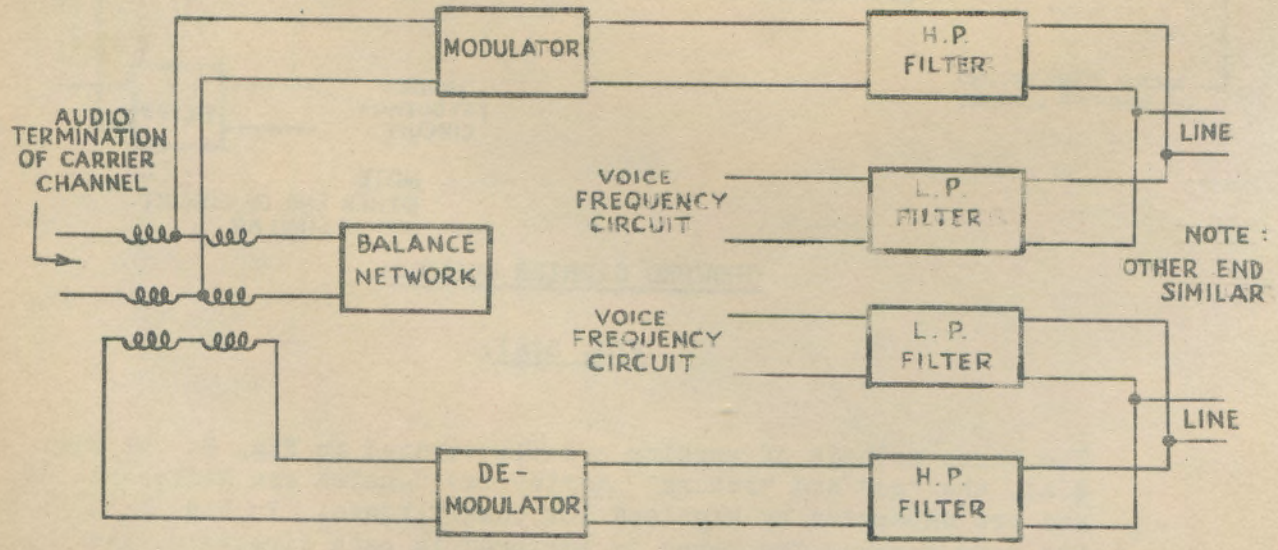

FOUR WIRE CARRIER WORKING.

FIG. 8(c).

4.7 Most of the carrier systems at present working on aerial lines make use of the "grouped" system. This system is free from balancing difficulties, its only disadvantage being that it requires twice the frequency band width per channel as the "balanced" system.

The balanced system is not used extensively because of the difficulty of maintaining an accurate balance against the line impedance, especially in the case of aerial lines. An outstanding example of the balanced system is the installation of two balanced carrier channels in the submarine cable between Victoria and Tasmania. It is possible (although not easy) to obtain and maintain a very accurate balance for such cables as they have a comparatively smooth impedance/frequency curve.

4.8 The four-wire method of carrier working is primarily used in cable carrier systems because, as the frequency to be transmitted in a cable is increased, the crosstalk difficulties are greatly intensified. To enable circuits to be obtained with sufficient freedom from crosstalk it is necessary to provide either special screened pairs for the carrier circuits or provide separate cables for the two directions of transmission.

4.9 Multi-Channel Carrier System. The principles of carrier working just discussed should be sufficient to enable the simplified operation of a multi-channel carrier system to be clearly followed. Fig. 9 (attached) illustrates in a block schematic form the arrangement of the equipment at one end of a system which provides three telephone channels in addition to the normal speech circuit over a single pair of wires.

The arrangement is typical of systems installed by the Department, and the manner in which the frequency band from 0-30,000 cycles per second is utilised is indicated in Fig. 10.

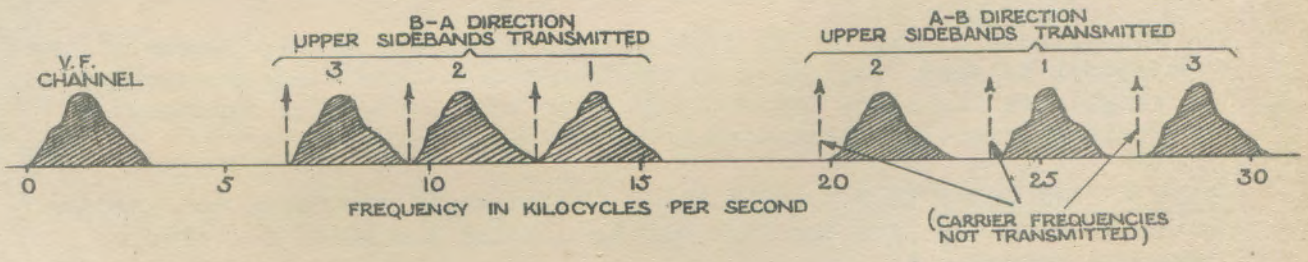

3 CHANNEL (GROUPED) CARRIER SYSTEM
CARRIER FREQUENCIES AND TRANSMITTED SIDEBANDS.

FIG. 10.

/ A

A band of frequencies extending from 6-16 kC/sec. provides three channels to transmit speech in one direction, and a band extending from 20-30 kC/sec. provides three channels for speech in the other direction. Regarding each individual band as the equivalent of a pair of wires, then the arrangement used provides three 4-wire circuits.

4.10 Referring to Fig. 9, and considering channel 1, speech from the subscriber passes via the switchboard and the hybrid coil to the modulator M1. In the modulator, the audio-frequencies modulate the 23.7 kC/sec. carrier supplied from the valve oscillator O1. The modulator is of the carrier suppression type and delivers to the modulator band filter the two sidebands only. The modulator band filter is designed to attenuate greatly the lower sideband and other unwanted products of modulation, including speech frequencies, and to pass the upper sideband (approximately 24-26.3 kC/sec.) to the transmitting amplifier. The transmitting amplifier simultaneously amplifies sideband currents of channels 1, 2 and 3 outgoing from the terminal. From the output of the transmitting amplifier, the carrier frequency currents pass from the Transmitting Directional Filter through the high pass filter, H.P., to line and so towards the other terminal of the system.

4.11 Speech from the subscriber at the other terminal, who is speaking over channel 1, arrives over the line in the form of sideband currents within the frequency range 13.2 kC to 15.5 kC/sec. The high pass filter of the line filter group passes the received carrier frequency currents towards the directional filter group. The sideband currents of channel 1 are within the frequency range passed by the receiving directional filter. They are accordingly passed towards the receiving amplifier. This amplifies the incoming sideband currents on all three channels which are delivered to the demodulator band pass filters. These filters pass the currents towards their appropriate demodulators where the conversion from sideband to the original speech frequencies takes place. The demodulator output passes direct to a low-pass filter, which suppresses all unwanted products of demodulation, and passes the audio-frequency component to the hybrid and so to the subscriber's telephone.

4.12 The approximate limits of the frequencies, which are freely passed by the individual filters, are shown in kC/s. per second in their respective rectangles in the block schematic diagram in Fig. 9. The functions of the various pieces of apparatus are summarised hereunder:-

Line Filter Group (H.P.1 and L.P.1). To separate the voice and carrier currents incoming from the line and to combine the voice and carrier currents outgoing to line.

Direction Filter Group (T.D.F. and R.D.F.). To discriminate between carrier currents in the two ranges of frequency which are used for the two directions of transmission.

/ Transmitting

Transmitting Amplifier. To amplify the currents of all three channels outgoing towards the distant terminal.

Receiving Amplifier. To amplify the currents of all three channels received from the distant terminal.

Modulator Band Filter (M.B.F.1 etc.). To eliminate the unwanted sideband, the carrier frequency, and the speech frequency components from the modulator. To assemble together the outgoing currents of all three channels at the input to the common amplifier.

Demodulator Band Filters. To direct the received carrier currents to the appropriate demodulators.

Modulators (M1 etc.). By the interaction of the audio currents and the appropriate carrier frequency to produce the sideband currents.

Demodulators (D1 etc.). By the interaction of the received sideband currents and the carrier frequency to convert sideband currents to the original audio currents. The demodulator shown in Fig. 9 should be understood to include the low pass filter necessary to eliminate the unwanted high frequencies which accompany speech in the demodulator output.

Hybrid Coils. - To couple together the audio transmitting and receiving sides of the carrier channels for connection to the two-wire subscribers circuit.

4.13 Fig. 9 shows the apparatus at one terminal only. The arrangement at the other end of the circuit is identical, with the exception that the carrier frequencies supplied to the modulators and demodulators are interchanged. The transmitting and receiving directional filters also have to be interchanged.

4.14 From a consideration of Fig. 10 it will be noticed that there are gaps between the bands of frequencies transmitted, so that the whole available range of frequencies is not actually used for the transmission of speech. The gaps are required to enable the action of the filters to change from transmitting freely in the pass range to heavy attenuation in the frequency range used by the neighbouring channels. To a certain degree the gaps between the channels can be reduced by using filters with more sections, but because in practical filters the change from the pass band to the stop band is more or less gradual, the addition of further filter sections tends towards less efficient transmission of the frequencies at the upper and lower edges of the transmitted frequency band. Thus, the spacing of the transmission bands is a compromise between quality of transmission (i.e. frequency response), cost of filters and the number of channels in a given frequency range. The larger gap at 15kC is necessary because of the greater differences in transmission

/ levels

levels at each end of the circuit between channels transmitting in opposite directions, this requiring heavier filter attenuation.

4.15 The carrier frequencies and the particular sideband frequencies selected for transmission in a multi channel carrier system are not selected at random. Consideration of Fig. 10 will indicate that if the carrier frequencies of the various channels were closer together then the produced sidebands would overlap and the filters could not provide the necessary separation.

4.16 Hybrid Coils. The hybrid coil (sometimes called a three winding transformer, a differential transformer or a terminating unit, is used in carrier telephone systems to enable the 2-wire telephone line of a local subscriber to be connected to the 4-wire (equivalent) circuit of the carrier system. It is also employed to connect the carrier terminal equipment to the line in a balanced type carrier telephone system.

4.17 The hybrid coil is dealt with in Paper No. 5. In hybrid coils used in carrier telephone systems the number of windings employed and their interconnection may differ greatly in each case but the principle involved is the same, that is the hybrid coil offers a method of turning a 2 way, 2 wire circuit into two one way circuits so that independent operations such as modulation or amplification can be carried out in opposite directions separately.

5. METHODS OF MODULATION AND DEMODULATION.

5.1 The relationship existing between a modulated wave and its component frequencies (carrier and sidebands) has been previously dealt with, and the methods employed to effect modulation in present-day carrier systems will now be considered.

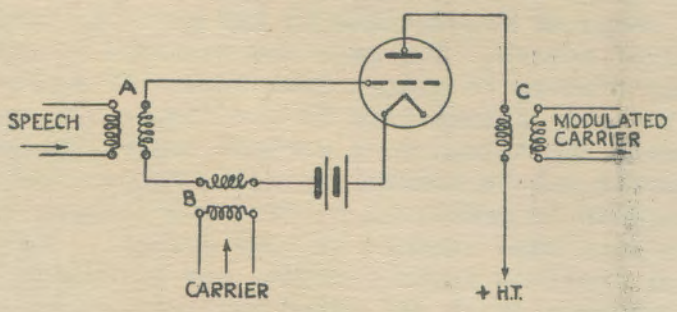

FIG. 11.(a)
GRID MODULATION

5.2 The circuit shown in Fig. 11 illustrates grid modulation. An alternating voltage of speech frequency is applied to the grid of the valve through the input transformer A in series with the carrier voltage of constant frequency applied through the transformer B.

/ The

The grid bias voltage is much greater than would be provided if the valve were to be used as an amplifier, with the result that the output of carrier at C during the period of no application of audio input will be very small.

5.3 The comparatively slowly varying speech voltage which is added to the carrier voltage can be regarded as causing a variation in the effective grid bias voltage. Thus, the speech voltage during its negative half waves increases the grid bias, causing the output of carrier to be still further reduced, and during the positive half-wave the output of carrier is increased as the normal value of grid bias for an amplifier is approached. The output of carrier current from the modulator thus varies in accordance with the instantaneous speech voltage. This system of modulation gives an output current consisting of the carrier, both sidebands and unwanted components of speech frequency, together with harmonics of the carrier and side-band frequencies. The effect is shown in Fig. 11 (b).

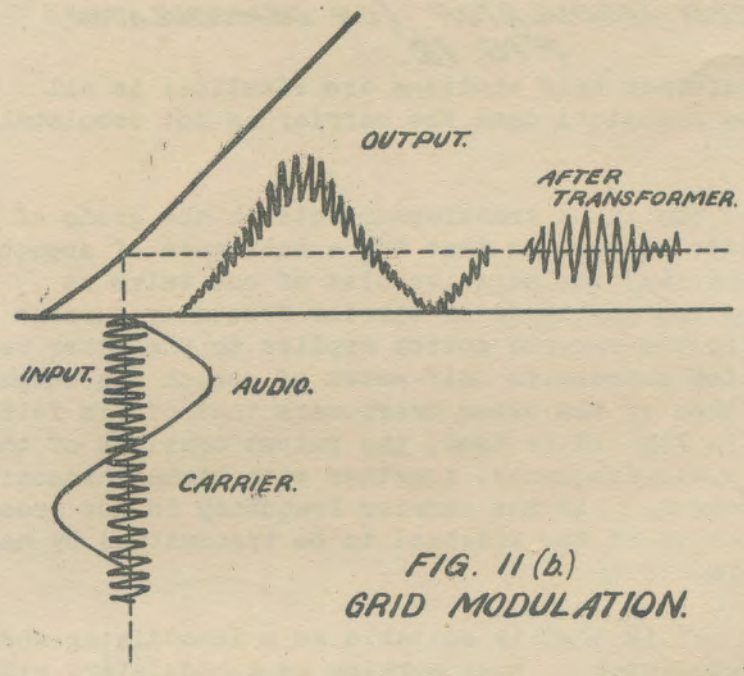

FIG. 11 (b)
GRID MODULATION.

5.4 Push-Pull Modulation.

In a later development of carrier telephony, single side-band transmission is employed, and an extension of the circuit shown in Fig. 11 is used to eliminate the carrier frequency from the output of the modulator. This is shown in Fig. 12 in which the circuit is arranged with a second valve as in a push-pull amplifier, but with the carrier voltage still applied in series with the grid bias voltage. The grid bias and carrier voltages are applied simultaneously, thus affecting equally the grids of both valves. The anode currents of the two valves, however, flow in opposite senses through the windings of the output transformer. During the period when speech voltage is not applied to the input transformer, the variations in anode current of the two valves cancel out, and no carrier current appears at the output terminals. This, of course, assumes that the

/ two

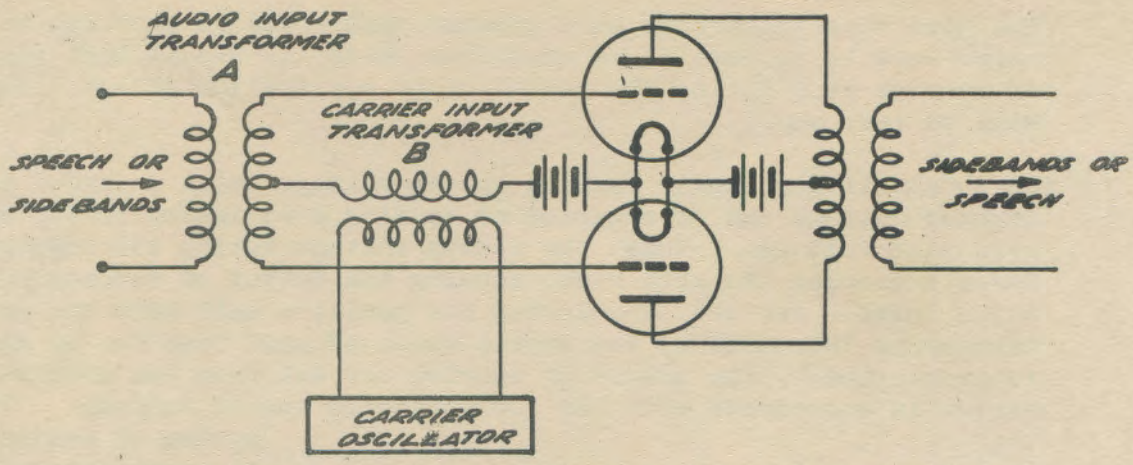

BALANCED MODULATOR (OR DEMODULATOR)
FIG. 12.

two valves and the transformer half windings are identical in all respects, whereas in the practical case the carrier is not completely suppressed.

5.5 Speech voltage applied at the input transformer acts on the grids of the two valves in opposite senses, so that for a half-wave of speech frequency of a given polarity, the negative bias of one valve is increased (thus reducing the amplitude of carrier frequency current in its anode circuit), while the reverse action applies to the other valve. The net result is that for successive half-waves of speech the output of first one valve and then of the other overpowers that of its fellow. When the circuit shown in Fig. 12 is used, the output consists of the two sidebands, and the audio-frequency, together with higher harmonic unwanted modulation products. As the carrier frequency is not present in the output, the selection of the sideband to be transmitted by means of filters is greatly simplified.

5.6 The circuit shown in Fig. 12 is equally suitable as a demodulator where a single sideband is transmitted. When working as a modulator, with speech frequency V and carrier frequency C, the output will consist mainly of an upper sideband frequency (C + V) and a lower sideband (C - V). When used as a demodulator, assume that the incoming sideband (C - V) is introduced at the input transformer A and that the carrier frequency C as before is introduced at the carrier input transformer B. The resulting output frequencies will then mainly be C - (C - V) and C + (C - V), i.e. V and 2C - V. The original speech frequency V is separated from the unwanted high-frequency component 2C - V by the low pass filter directly following the demodulator.

5.7 Modulation and Demodulation using Metal Rectifier Elements.

In all modern carrier systems modulation and

/ demodulation

demodulation are effected by employing metal rectifier units connected in special arrangements. Copper oxide metal rectifiers have so far been the most extensively employed, but some of the more recent systems are equipped with selenium rectifiers. The operation of both types is similar, and the term metal rectifiers may refer to either. The electrical properties and characteristics of metal rectifier elements are covered in Paper No. 3.

5.8 The use of metal rectifiers as modulators and demodulators dispenses with the necessity to use thermionic valves, but as the input levels it is permissible to apply to metal rectifier units are somewhat restricted they must be followed by an amplifier. This, of course, must be a thermionic valve arrangement, but as valve modulators and demodulators usually employ an amplification stage there is no economical disadvantage in the arrangement. The application of metal rectifiers has assisted in greatly changing the appearance of modern carrier systems as they result in considerable savings in space. Their main advantages are:-

(1) Reliability;
(2) Economy of space;
(3) Reduced maintenance costs;
(4) Where single sideband transmission is employed a greater degree of carrier suppression is possible than can be obtained with modulator circuits employing thermionic valves.

5.9 The operation of metal rectifier modulator circuits can be easily explained if the rectifier elements are considered as resistances which depend on the magnitude of the applied polarity, and that these rectifier elements can thus be replaced by a resistance whose value is controlled by the carrier voltage. This conception corresponds quite well with the actual process so long as the input carrier voltage is high in comparison with the input audio voltage. This condition is always fulfilled in practice.

5.10 Thus, the resistance of a metal rectifier will be controlled almost entirely by the carrier voltage, and during the time the carrier voltage passes through a complete cycle the metal rectifier becomes alternately conducting and non-conducting. During the half cycle of carrier voltage in which the rectifier becomes conducting, it offers a very low resistance to the audio voltage (which is always less than the carrier voltage), and is independent of the polarity of the audio voltage. During the remaining half cycle the applied carrier voltage causes the rectifier to offer a high resistance to the audio voltage.

5.11 Thus, it can be assumed that the rectifier acts as an ideal switch

/ in

in that it has an infinitely great conductivity for the whole of one half carrier cycle, and an infinitely great resistance over the other half of the cycle.

5.12 The arrangement of the so-called ring bridge modulator is shown in Fig. 13 (a) opposite. When the carrier voltage is large in comparison with the audio voltage, then the resistance of the metal rectifier discs will be controlled by the carrier. During the time the carrier voltage passes through one complete cycle, pairs of the copper oxide discs become alternately conducting and non-conducting. The equivalent circuits of Fig. 13 (a) can be drawn with the two halves of the carrier frequency cycle, and are shown at (b) and (c). Rc represents the resistance of a metal rectifier in the conducting direction, and Rn the resistance in the non-conducting direction during half a cycle of the carrier frequency. The process may be readily understood if it is considered that the rectifiers are replaced by switches coupled to a motor driven mechanism representing the carrier oscillator. These switches are operated during each half cycle of the carrier frequency, and the conditions are illustrated in Fig. 13 (d) opposite. The switches are being moved back and forth at a much higher frequency than the applied audio frequency, and an output wave form as shown in the diagram is obtained. The main components of this output wave are the major sum and difference components of the carrier and voice frequencies - namely, the upper and lower sidebands.

In this type of rectifier modulator, it will be noted that the carrier frequency is applied differentially to the input and output transformer windings, and does not appear in the output. An analysis of the output wave form also shows that the original audio-frequency does not appear in the output.

5.13 In some types of rectifier modulators the audio-frequency does appear in the output, but when it is considered that the modulator is followed by a band pass filter which is designed to pass only one group of sideband frequencies, the effect of the audio-frequency appearing in the output is not serious. The important component to suppress is the carrier frequency for the reason that its frequency lies close to the band width of the wanted sideband and, as previously mentioned, in practical filters it is difficult to change sharply from small attenuation in the wanted frequency range to high attenuation in the unwanted frequency range.

5.14 In practice, due to unbalances in the individual rectifier elements and the input and output transformers, it is not possible to obtain

/ complete

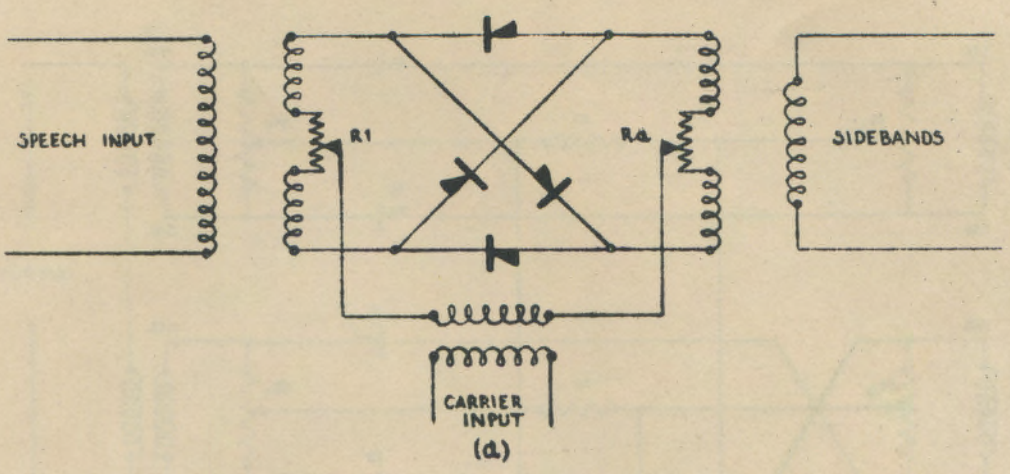

(a)

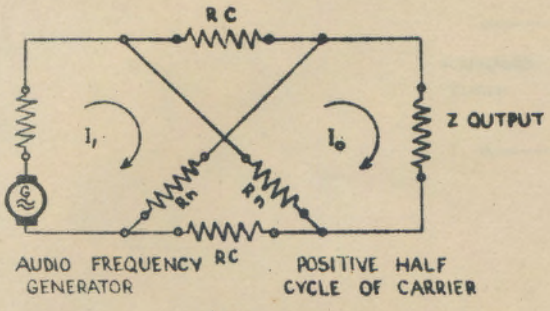

(c)

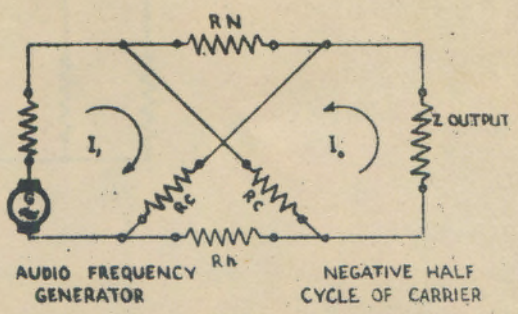

(b)

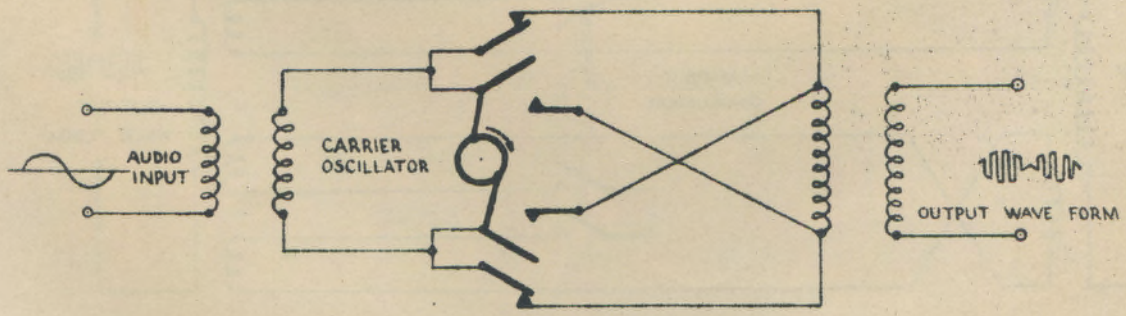

(d)

FIG. 13.

RECTIFIER (RING) MODULATOR

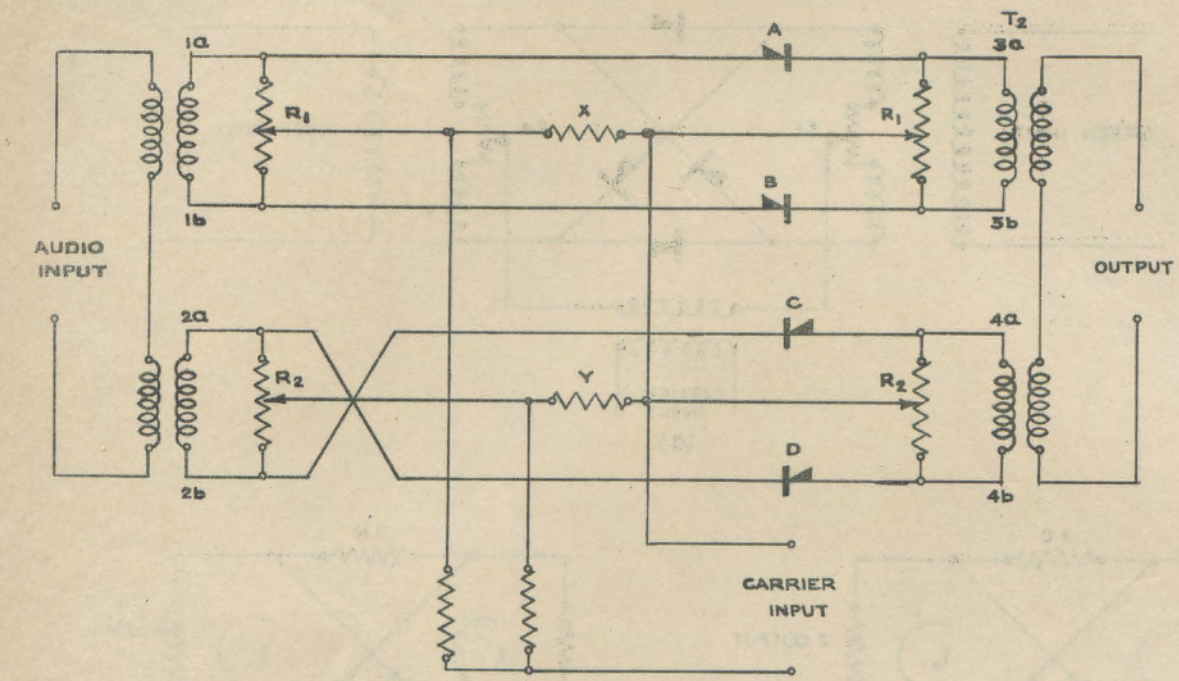

(a)

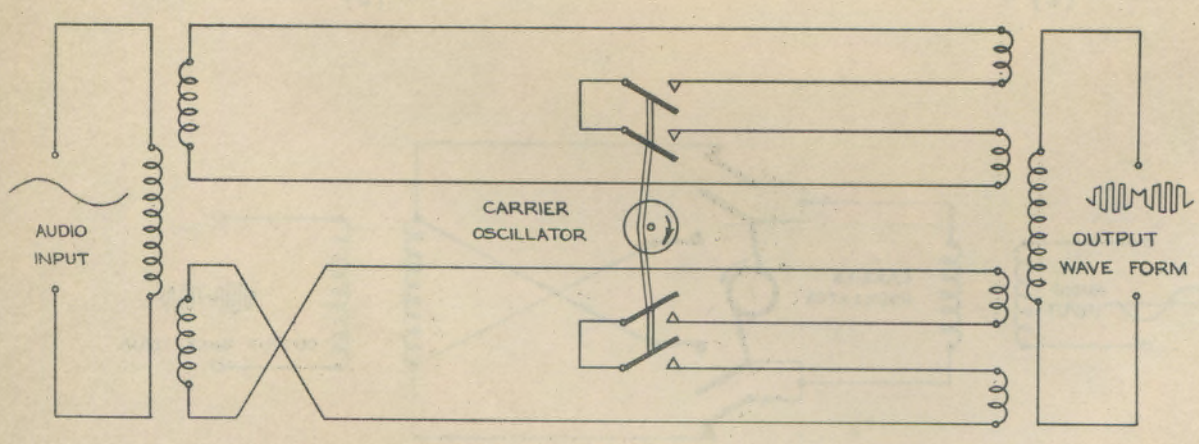

(b)

RECTIFIER MODULATOR.
FIG. 14.

complete suppression of the carrier frequency. Suppression figures of the order of 30 db to 40 db are common with present day metal rectifier modulator circuits, and it will be appreciated that the residue of carrier appearing in the output will again be severely attenuated in passing through the modulator band filter.

Referring again to Fig. 13 (a), the resistances R1 and R2 allow for adjustment of slight differences in the resistance characteristics of the rectifiers and transformers, which would upset the balance of the circuit and result in poor suppression of the carrier. In the practical case, these resistances are supplied in the form of adjustable potentiometers so that periodical adjustments for "carrier leak" can be carried out to compensate for any variations in rectifier or transformer resistance characteristics which might take place.

5.15 Another type of rectifier modulator is shown in Fig. 14 (a) opposite. When rectifiers A-B are conducting, then rectifiers C-D will be non-conducting. When the polarity of the applied carrier voltage is such that 1 (a) and 1 (b) are positive to 3 (a) and 3 (b) then rectifiers A-B will be conducting and a circuit exists for the audio current to flow from 3 (a) to 3 (b) through the primary of output transformer T2. When the polarity of the applied carrier is reversed, rectifiers C-D become conducting and rectifiers A-B non-conducting, and a circuit exists for the audio current to flow from 4 (b) to 4 (a) through the primary of output transformer T2.

Fig. 14 (b) indicates the conditions when the rectifiers are replaced with switches controlled by the carrier oscillator, and shows the resultant output wave form. The carrier is applied differentially to the input and output transformers, and is thereby suppressed from the output and an analysis of the output wave form shows that the original audio-frequency is also suppressed. The resistances R1 and R2 are for "carrier leak" adjustment, and resistances X and Y provide a load for the carrier oscillator.

This type of rectifier modulator has the advantage that the resolution of the circuit into two separate circuits connected in parallel makes carrier leak adjustment easier, as it is only necessary to balance the two rectifiers associated with each direction of current flow. In the previous type described all rectifiers had to be chosen for identical resistance characteristics.

/ 5.16

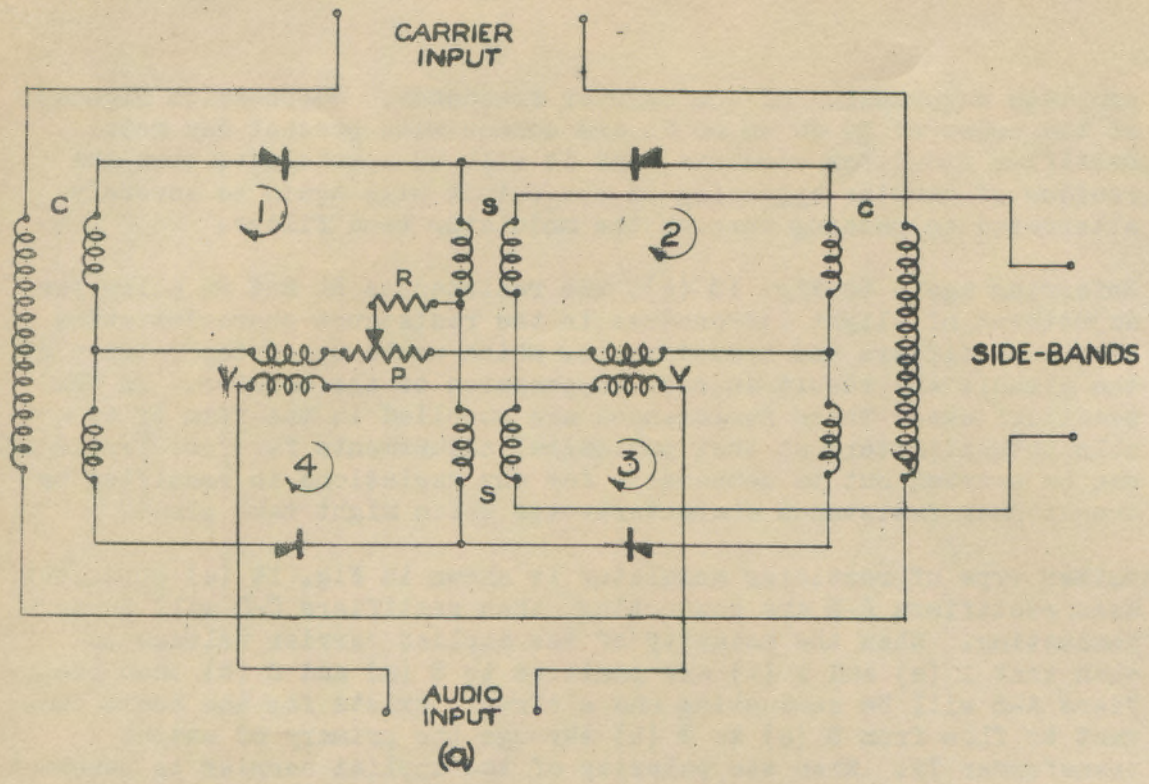

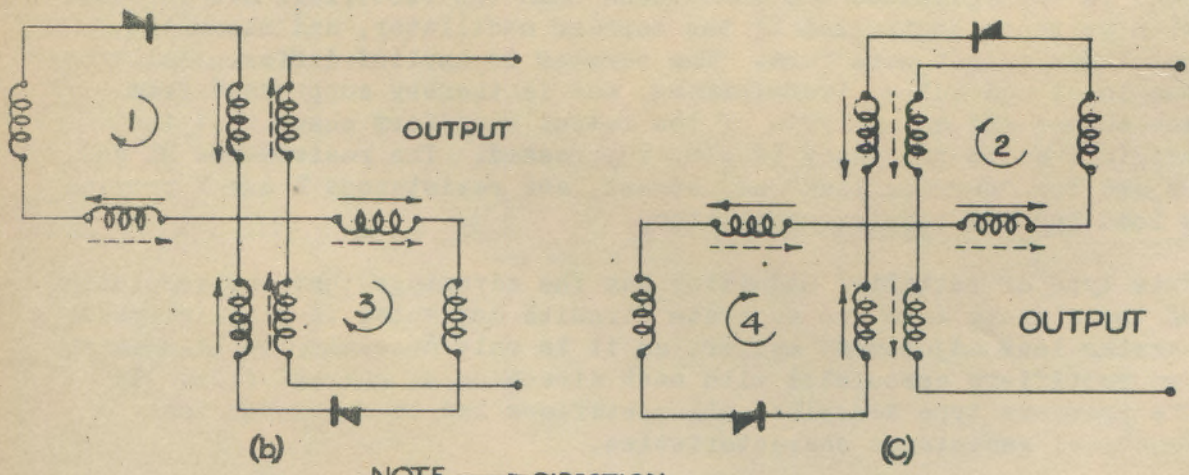

RECTIFIER (STAR) MODULATOR.

FIG. 15.

5.16 A further type employed in carrier telephone equipment is shown in Fig. 15 opposite, and is sometimes termed the "Star" type modulator. The audio current is supplied to the two halves of coil V, and it will be shown that the application of the carrier voltage from the oscillator through the two halves of coil C, combined with the action of the rectifiers, is again equivalent to the operation of a reversing switch. Assume that over a small period of time the audio current in the primary winding coil V (both halves) produces an E.M.F. in the secondary comprised in the bridged circuit, in the direction of the arrow. Consider a particular instance when the induced E.M.F. from the carrier coil C is in the direction tending to force currents in the four quadrants of the circuit in a clockwise direction. Then it will be clear that in quadrants 1 and 3 the unidirectional properties of the rectifiers will allow such currents to flow, but this will not be the case for the rectifiers in quadrants 2 and 4. During the succeeding half cycle of the applied current, the induced E.M.F. will be in the direction tending to force the current in the four quadrants of the circuit in an anti-clockwise direction. Under these circumstances, rectifiers 2 and 4 pass current and those in quadrants 1 and 3 are blocking.

5.17 Considering the rectifier circuit as a medium of transfer of energy between the primary of coil V and the secondary of coil S, Fig. 15 (b) shows the direction of the currents due to the audio current during the time rectifiers 1 and 3 are conductive.

During the second half cycle of the carrier, the corresponding equivalent circuit conditions and directions of audio current will be as shown in Fig. 15 (c). Comparing (b) and (c), it will be noted that the difference lies in the direction of the audio currents in coil S. In other words, the reversal of the carrier current has effected a change in the direction of the audio current in the same manner as would result from the operation of a reversing switch. Such reversals, therefore, take place at the frequency of the carrier current, and it will be clear that the process is the same as described in the previous circuits, resulting in the production of upper and lower sidebands of the carrier and voice frequencies.

5.18 It will be noted that the carrier currents in the two halves of the coil S are in opposition, and in identical circuits they will be equal in magnitude so that their combined effect through the transformer S is zero. Similarly, the opposing carrier currents in the two halves of coil V will also cancel - hence the carrier frequency is not transmitted either to the output or to the voice input circuit.

An analysis of the output wave form shows that a similar reasoning applies for the audio-frequency input to the modulator so that suppression in the output of both the carrier and the audio frequencies is effected.

/ 5.19

5.19 Referring to Fig. 15 (a), the reason for the addition of resistance R to the circuit can be explained as follows. When the two rectifiers of a pair are in a conducting direction they form the only resistance in the path of the carrier current. Since the value of their resistance is so low as to constitute virtually a short circuit, there is a tendency for the carrier supply in the windings of coil C to be short-circuited for successive half cycles by the alternate pairs of conducting rectifiers. It follows that the carrier blocking voltage in the otherwise inoperative quadrants will be considerably diminished, even to the point at which it may be less than the audio voltage. In such a case, the audio voltage becomes the controlling or switching voltage, and the operation of the modulator is impaired. The resistance R overcomes this disability simultaneously for both active quadrants to which it is common so that the resistance assists the blocking action of the rectifiers in the inoperative quadrants, and at the same time provides a load for the carrier oscillator. Resistance R has no effect upon the induced audio current in the two secondary halves of coil V. To overcome the effects of any differences in the characteristics of the transformers or rectifiers which would upset the balance of the circuit and result in poor suppression of the carrier, an adjustable potentiometer P is inserted in the circuit as shown in Fig. 15 (a).

All the metal rectifier modulator circuits just described are equally suitable for use as demodulators.

5.20 Intermodulation. Modulation of one wave by another is always produced when the waves pass together through non-linear apparatus whose output is not strictly proportional to the input. Examples of non-linear apparatus are valves, networks incorporating metal rectifiers, and magnetic cored chokes and transformers. Magnetic hysteresis modulation is not used for intentional modulation being of poor quality and efficiency, but it often gives rise to trouble by producing unwanted modulation.

In transmitting and receiving amplifiers used in multi-channel systems where a number of conversations are amplified simultaneously, special care is necessary to avoid interference between each conversation due to unwanted modulation taking place as a result of the non-linearity of the valve elements.

6. VOLTAGE LIMITERS.

6.1 The characteristics of metal rectifiers used as modulators and demodulators require that the voice input voltage shall be low in comparison with the applied carrier voltage. It is usual, therefore,

/ to

to precede them by a voltage limiter (sometimes termed volume limiter) whose function is to keep the input voltage to the modulator from exceeding a predetermined value, regardless of the level delivered by the subscriber.

6.2 One method of complying with these requirements is to make use of the characteristics of a special neon lamp which is connected across the secondary of the modulator input transformer.

At amplitudes below those at which limitation takes place the neon lamp produces negligible loss in the speech circuit. If the voltage during either a positive or a negative half-cycle of speech rises above the permissible limit, the neon lamp strikes and produces a shunting effect across the input to the modulator, thus preventing overloading. The effect of this limitation of speech power on articulation is negligible, and the flashing over of the limiter cannot be detected by the subscriber.

6.3 Another method of achieving voltage limitation is the employment of metal rectifier elements themselves, and the circuit arrangements are shown in Fig. 16.

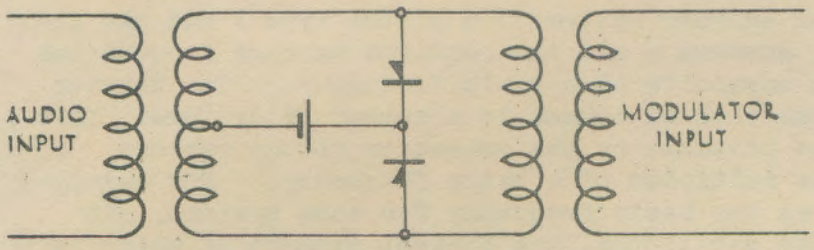

VOLTAGE LIMITER
FIG. 16.

The rectifier is normally biassed to a potential which makes its impedance high so that, normally, the shunt loss on transmission is negligible. If speech voltage (after transformation) exceeds the biassed potential, the impedance falls to a very low value, and produces a shunting effect across the modulator input, thus preventing overloading.

6.4 The use of voltage limiters is not confined entirely to modulators. They also can be usefully employed in preventing overloading of amplifier circuits.

7. GENERATION OF CARRIER FREQUENCIES.

7.1 The production of the required carrier frequencies is more usually achieved by using thermionic valve oscillator circuits.

/ The

The principles of a thermionic valve used as an oscillator have been previously covered in Paper No. 2,

7.2 In a multi-channel carrier system the various modulator and demodulator oscillator circuits are similar, differing values of tuning inductance and capacity being employed in each to obtain the particular carrier frequency. The most important requirements of an oscillator circuit used for carrier operation is that the frequency should be stable over fairly wide variations of temperature and supply voltages. High frequency stability is assisted by choosing components which have a low resistance v. temperature coefficient.

A means of control is provided in the tuning circuit which allows of slight alteration in frequency, so that the associated modulator and demodulator oscillators of a particular channel may be synchronised accurately. A check of this synchronisation is carried out at regular periods.

7.3 In some voice-frequency telegraph systems the various channel frequencies are derived from a special frequency generator. This simplifies the rack equipment and is especially useful at large centres as one generator is sufficient to supply upwards of ten complete 18-channel systems.

7.4 In modern multi-channel carrier systems - e.g. the Type J and the 12-channel cable carrier systems - all the required carrier frequencies are obtained from the harmonics of a basic frequency. The carrier supply arrangements can thus be common to a number of systems. This simplification is made possible by the selection of the various channel frequencies as multiples of a basic frequency. For example, 4 kC has been chosen as the basic frequency for some systems, and this is generated in an oscillator, the control element of which is a tuning fork, the circuit being designed to have the necessary output and frequency stability. The output is then fed to a circuit which produces the desired harmonics of the basic frequency, and each harmonic frequency desired is selected by quartz crystal filters.

Failure of the master oscillator, of course, would cause the failure of all channels of systems operating from such a supply. Provision is made for such a contingency by an emergency master oscillator, which is automatically switched into circuit when the regular supply fails.

/ 7.5

7.5 A typical oscillator circuit employed in a modern carrier telephone system is shown in Fig. 17.

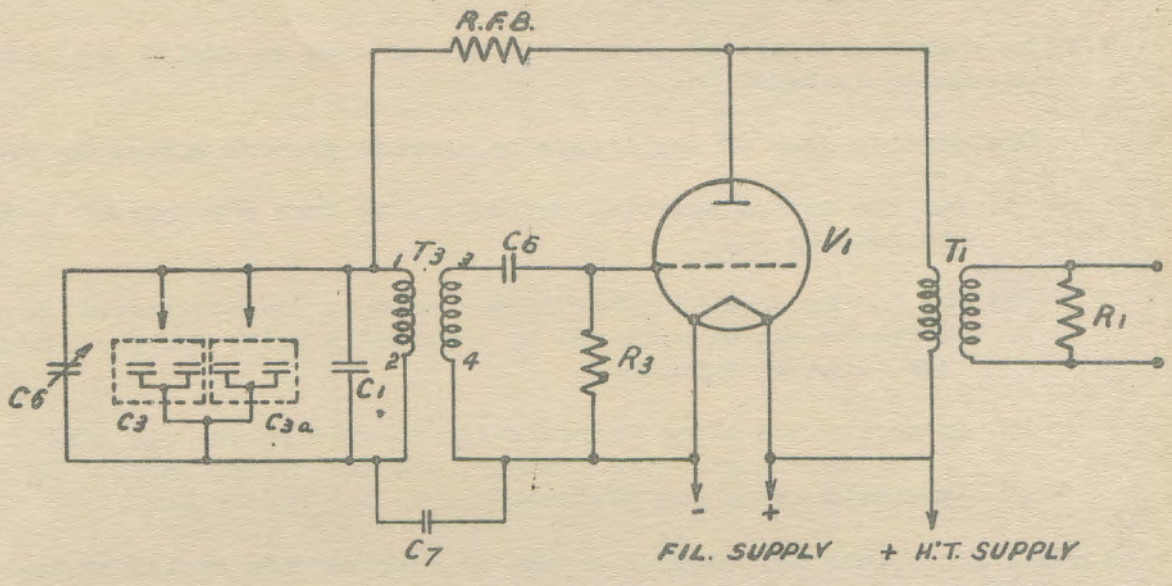

FIG 17.
CARRIER FREQUENCY OSCILLATOR.

Oscillations generated in Valve V1 are fed partly to the output by means of output transformer T1 in the plate lead and partly through the feedback resistance to the oscillator coil T3 in the grid circuit of the valve. The return path for the oscillator currents to the filament is completed by condenser C7, which prevents the flow of D.C. current from the plate battery through the feedback circuit. Condensers C1, C3, C3A and C5 and the winding 1-2 of transformer T3 form the oscillatory circuit. The oscillations are applied to the grid circuit of the valve through windings 3-4 of transformer T3. The tuning condensers consist of C1, C3 and C3A, which are mica condensers, and C5, a variable air condenser. Grid bias for V1 is obtained from R3 in conjunction with condenser C6. The frequency of this type of oscillator would vary if the load impedance were considerably altered, so that a resistance R1 is connected across the secondary of the output transformer to make it somewhat insensible to load changes.

7.6 According to the capacity value selected in condensers C3 and C3A, so the carrier frequency can be altered to suit the requirements of each channel of a 3-channel system. Condenser C5 provides for the final synchronisation of the associated modulator and demodulator

/ oscillators

oscillators of a channel, and is provided with a locking device so that it cannot be accidentally altered when once set.

8. AMPLIFIERS IN CARRIER SYSTEMS.

8.1 The characteristics of thermionic valves used as amplifiers have been discussed in Paper No. 1.

The various uses of amplifiers in carrier systems are as follow:-

(1) For use as transmitting amplifiers so that the correct level may be sent to line.

(2) For use as receiving amplifiers so that the attenuated carrier currents may be restored to a suitable value for application to the terminal equipment.

(3) As amplifiers after demodulation to restore the required demodulation products (namely, the audio-frequencies) to a suitable level for transmission to the subscriber.

8.2 The amplifiers may consist of one or more voltage amplification stages, and where high outputs into low impedances are required they are succeeded by a power stage. Prior to the introduction of negative feedback, the amplifier valves consisted almost exclusively of triodes.

In providing amplifiers for carrier systems, each amplification stage required is examined, and a valve selection made which, in conjunction with the circuit components to which it is connected, will give the required amplification together with the necessary output. The preliminary stages provide the necessary voltage amplification, and valves having high amplification factors are selected. The final stage does not give very much gain, but produces the required power output. For large power outputs a combination of valves in parallel and parallel push-pull arrangements is sometimes used.

8.3 Gain controls are provided in receiving circuits to compensate for the variation in the transmission equivalent of a circuit under varying weather conditions. The gain control on the receiving amplifier usually adjusts the levels of all channels simultaneously. A control individual to each channel is equipped on the demodulator amplifier, and this serves to adjust for differences in attenuation at the different side-band frequencies.

8.4 The particular requirements of amplifiers in carrier systems are:-

(1) An even response over the frequency range.
(2) Adequate power handling capacity.

/ (3)

(3) Gain stability.
(4) Low percentage of intermodulation products.

A typical amplifier circuit of the type employed prior to the introduction of feedback is shown in Fig. 18 attached.

The amplifier circuit consists of two stages of amplification, the valves in each stage being connected in a balanced push-pull circuit. The primary of the output transformer consists of four windings, each connected in the output circuit of one of the valves in the second stage. The output of the amplifier is taken from the two series windings comprising the secondary of this transformer. The gain of the amplifier is controlled by the balanced potentiometer in the input circuit.

The filaments of the valves are supplied by two parallel circuits, one for valves V1 to V3 and the other for valves V4 to V6. The grid voltage for valves V3 and V6 is applied from the voltage drop across the filaments of valves V1 to V5 and is applied through the secondary winding of the input transformer. The grid voltages for valves V2 and V5 are obtained partly from dry cells and partly from voltage drop in the filaments of valves V1 and V4. Valves V1 and V4 obtain their bias partly from the same dry cell battery, the remaining voltage being applied from additional batteries connected between the grids of the valves.

8.6 Negative Feedback Amplifiers. The introduction of negative feedback permitted the use of multi-electrode thermionic valves such as pentodes, their use being previously limited because of their tendency to produce distortion when connected to the low impedance loads occurring in carrier equipment.

In general terms, the feedback amplifier may be described as an amplifier in which portion of the energy in the output circuit is transferred back to the input circuit so that it combines with the normal input energy. This transference of energy from output to input results in a change in gain of the amplifier as measured from the input to the output terminals. When the gain is increased, the feedback is said to be positive. When the gain is decreased the feedback is said to be negative.

The latest advances in carrier working are closely connected with the development of negative feedback amplifiers. The negative feedback principle has facilitated the design of amplifiers which combine the high gains obtainable with screen grid and other multi-electrode valves together with great stability of gain and low level of harmonics. These characteristics are very favourable to the development of multi-channel carrier systems for long distance circuits.

/ 8.7

8.7 Feedback is no doubt familiar in earlier amplifiers where unwanted capacitive or inductance couplings enabled voltages from the output stage to find their way back to earlier stages causing alteration of gain at certain frequencies. Reaction in a radio receiver and the tendency of the two-wire repeater to become unstable if the impedances of the lines on either side of the repeater are not sufficiently well reproduced by the balance networks, are further examples of unwanted feedback.

8.8 In the practical case where negative feedback is desired some of the amplifier output is fed back via an impedance which adjusts the amount of feedback to the required value, and also adjusts the phase so that the feedback enters the amplifier input in opposite phase to the original input, and thereby reduces the amplifier gain.

The arrangements adopted to feed back a portion of the energy from the output circuit more usually consist of a resistance arranged in the form of a potential divider across the output. In some instances this feedback resistance is adjustable so that alterations in the amount of feedback may be readily made, this giving an easy method of regulating the gain of the amplifier.

Feedback is more usually applied to an amplifier as a whole, the amplifier consisting of one, two or more stages of amplification. In some cases it is confined to a single stage in a multi-stage amplifier or, alternatively, it can be applied from an intermediate stage.

8.9 Certain advantages accompany the apparent needless reduction of gain in an amplifier by the application of negative feedback. If the ordinary amplification of the circuit (μ) is very much greater than unity, it can be proved that the gain of the amplifier when feedback is employed is virtually independent of the gain (μ) of the amplifier proper, and is controlled by the feedback path only. In practice, owing to the large gains available from modern multi-electrode valves, it is quite easy to obtain extremely high values for μ.

The following advantages, therefore, follow from the fact that it is possible to construct an amplifier, the gain of which is mainly dependent on the feedback path:-

(1) Changes of valves will not materially affect the gain of the feedback amplifier. In an amplifier without feedback, a change of valves may alter the gain by a decibel or more. In the case of a feedback amplifier a change of valves will slightly alter the gain in the (μ) path, but the effect of this on the total gain with feedback is negligible.

/ (2)

(2) For the same reasons, changes of supply voltages within reasonable limits will have a negligible effect on the gain of the feedback.

(3) The gain-frequency characteristic can very easily be made flat over a wide range. This follows from the fact that the gain with feedback is dependent mainly on the feedback circuit which, in practice, usually consists of resistances which do not introduce frequency distortion. If desired, the components of the feedback network can be designed to give a rising gain-frequency characteristic thus achieving "equalisation" of the amplifier input.

(4) The level of harmonics generated in any particular amplifier is dependent chiefly on the power output from the amplifier and the harmonics can be considered as being generated in the last stage of amplification. In regard to the voltage applied at the input, as the effect of adding negative feedback is to cause it to control the final gain, the reduction which takes place in regard to a voltage applied at any point in the amplifier circuit can thus be considered as applied to any harmonic voltage components which might occur.

(5) A further advantage obtainable in the use of feedback is that it becomes possible to control the amplifier impedances to a high degree of accuracy so that, by careful design, the input and output impedances can be made practically constant over a wide frequency range.

8.10 The main advantages obtained by the use of feedback may, therefore, be summarised as follows:-

(i) Changes of valves will not materially affect the gain.

(ii) Slight changes of supply voltages will not materially affect the gain.

(iii) The gain-frequency characteristic can be made flat over a very wide range or alternatively "equalisation" can be achieved.

(iv) The harmonics produced by the amplifier are considerably reduced.

(v) The maximum power output for a certain percentage harmonic distortion is increased and the gain-load curve considerably improved.

/ (vi)

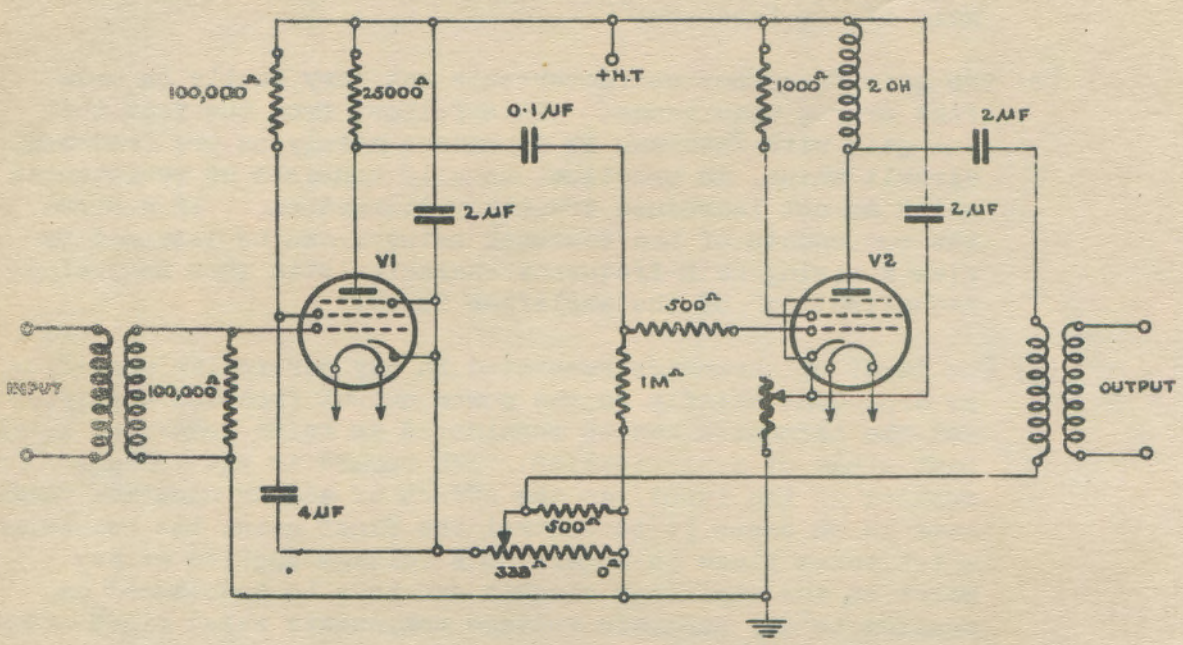

Feedback Amplifier.

FIG. 19.

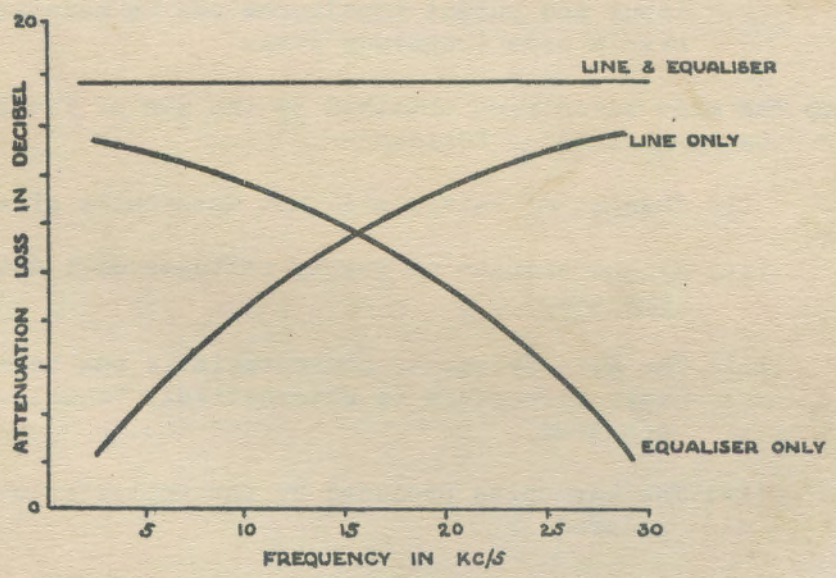

Curves Illustrating Result of Equalisation.

FIG. 20.

(vi) Output and input impedances can be obtained, which are substantially independent of valve changes and supply voltage variations.

8.11 A typical feedback amplifier circuit used in carrier working is shown in Fig. 19. The input transformer has a 1:10 step-up ratio. The first stage valve is a pentode of low input capacity and high mutual conductance. The screen voltage is maintained correct by the 100,000 ohm series resistor which also forms the screen decoupling circuit in conjunction with a 4 mf. condenser. The anode impedance consists of a 25,000 ohm resistor, and decoupling is provided by a 2 mf. condenser.

The two stages are resistance capacity coupled, and the output valve is a power pentode. The output transformer is choke capacity fed, and has an output impedance of 600 ohms.

The feedback circuit consists of a variable resistance in series with the anode load, applying a predetermined fraction of the output voltage back to the grid of the first valve. The feedback resistance is variable so that the gain of the amplifier may be controlled by alteration of this resistance.

9. LINE CONSIDERATIONS AND EQUALISATION.

9.1 The passage of the carrier currents from the terminal apparatus over the line circuit which serves to connect the two terminals of a terminal and a repeater station gives rise to several problems. The line loss or attenuation, the stability of transmission, the possibilities of crosstalk from other carrier systems on the same route and interference from currents from external sources are all factors which must be considered not only in connection with the arrangements of the wires themselves, but also in the design of the terminal equipment, so that satisfactory overall speech transmission may result.

9.2 In deciding the transmission performance of a carrier system it is necessary to consider the characteristics of the lines as well as those of the equipment. At carrier frequencies the line losses and the variations for these losses with changes in weather conditions are considerably greater than at voice frequencies due to skin effect, insulator losses and other causes. Changes in temperature also affect the attenuation, the loss increasing as the temperature rises. Variations due to changes in temperature are, however, smaller than those due to changes from dry to wet weather, and are more likely to occur gradually. It will be appreciated that the variations in attenuation with weather increase with the length of the system, and that more frequent adjustments will be required on the longer systems to maintain the overall circuit equivalent within given limits.

/ 9.3

9.3 The carrier frequency attenuation of cable circuits is much greater per unit length than that where open wire lines are used - hence the losses introduced in comparatively short sections of cable, either at entrance to offices or at intermediate points, are of considerable importance. In addition to the attenuation of the cable itself, there are large reflection losses at the junction of the cable and the open wire due to the differences in their characteristic impedances. The carrier terminal and repeater equipment have been designed to offer the same impedance as the average open wire line so that the same considerations apply at the junction of the cable and the carrier equipment. By applying carrier loading which has been specially developed for the purpose, the attenuation loss of such a cable can be very considerably reduced. In addition, the reflections referred to will also be reduced due to the impedance matching properties of the loading.

9.4 Where several carrier systems are to be placed on a route, crosstalk between systems becomes an important consideration. Where only a few systems are involved it is sometimes possible, by separating the systems widely, to operate with only the regular voice-frequency transpositions, but, in general, additional transpositions are required to give satisfactory carrier operation.

9.5 In addition, the carrier currents may be interfered with on the line circuits by miscellaneous currents which enter the circuit by induction from other sources. These miscellaneous currents manifest themselves as noise in the carrier channels. This makes it essential to use only the metallic circuit, i.e. two wires well balanced to ground for transmitting the carrier currents. The balance to ground must be maintained at a high degree by frequency transpositions in the wires. Even with these precautions, unavoidable residual balances may permit a certain amount of interference to appear. The final remedy is to ensure that the relations between the circuit length and the apparatus gains are properly considered in order that the speech currents may have ample margin above the noise currents at all points in the circuit.

9.6 In general, the crosstalk becomes worse as the frequency increases. For this reason, normal and staggered carrier systems have been designed for application to the same route. The frequency allocation of these systems is such that the sideband ranges of two similar systems are staggered with respect to one another both in the A-B and the B-A directions of transmission. The maximum speech energy of each channel of one system which occurs around the mid-frequencies of the transmitted sidebands falls largely outside the sideband ranges of the other systems. By this means the inter-system crosstalk between two such systems on the same pole route is considerably reduced below that which would occur between two systems of the same frequency allocation.

/ 9.7

9.7 Reactions on Voice Frequency Circuit. In superimposing a carrier system on a voice-frequency circuit line filters are added to provide separate paths for the voice and carrier circuits. The introduction of the filter in one side of the phantom group requires the addition of a network on the other side to maintain the balance of the phantom circuit from a noise and crosstalk standpoint. It is also necessary for return loss reasons to balance these units in the network circuits of voice frequency repeaters which may be located at the same point as a carrier terminal or repeater.

9.8 In some cases it is necessary to apply the carrier system to an omnibus trunk circuit, i.e. a trunk circuit with bridged telephone offices at intermediate points. In such cases excessive interference with the carrier system due to speech at one of the intermediate offices, and also interference with intermediate stations due to speech on the carrier system, are likely to occur unless suitable filters are provided at each intermediate station.

9.9 The line filters and the filters used at intermediate stations each introduce a loss of about 0.15 db to the through voice-frequency transmission. Where the voice-frequency circuit is equipped with repeaters and return loss conditions permit, these additional losses may be taken care of by readjusting the voice-frequency repeater gains. In some cases it may be necessary to resort to other means of improving the transmission of the voice-frequency circuit, such as loading of incidental cables or the addition of a voice frequency repeater.

9.10 To compensate for the frequency v. attenuation characteristics of the lines at carrier frequencies, it is necessary to employ equalisers in terminal and repeater equipment. An equaliser consists of a network of inductances and capacitances so arranged that the attenuation v. frequency response of the network is the inverse of that encountered on normal aerial or cable circuits. In other words the equaliser introduces a high attenuation at low frequencies and low attenuation at high frequencies. Fig. 20 is an explanatory graph indicating:-

(a) The frequency-attenuation characteristic of a line.
(b) The frequency attenuation characteristic of a line equaliser.
(c) The frequency-attenuation characteristic of the resultant combination of line and equaliser.

9.11 In the later type systems variable equalisers are provided so that, depending on the length and characteristics of the line circuit preceding any terminal, the amount of equalisation necessary can be adjusted at the time of installation so as to maintain the level on all channels substantially equal at the input to the receiving amplifier.

/ 10.

10. PILOT EQUIPMENT AND SIGNALLING ON CARRIER SYSTEMS.

10.1 Mention has been made of the carrier-frequency attenuation with varying weather conditions. For this reason it is necessary to adjust the levels of a carrier system periodically at the receiving terminal to ensure that the overall transmission loss does not vary from that at which it was lined up for operation in the network. It is also necessary to adjust levels at repeaters to ensure that the input level is not too low, causing excessive noise, or too high, causing overloading of the amplifier valves producing distortion and crosstalk. For short-distance systems daily adjustment of level might be satisfactory, but where long-distance systems are required to operate in a high-grade trunk network it is desirable that level adjustments be made more frequently.

10.2 In such circumstances, pilot channel equipment is installed. This can be either manual or automatic. The manual system gives in decibels a direct reading of the average sideband level at the output of each repeater and receiving terminal. It furnishes an alarm to the carrier attendant if this average level varies by more than a predetermined amount.

10.3 The automatic pilot equipment, in addition to the above facilities, automatically varies the amplification of each repeater in turn, and of the receiving terminal, so that the levels are maintained at the values at which they were normally set. This is usually achieved by relay equipment following the pilot indicator, and arranged to drive a step-by-step switch which operates a variable attenuator. If the level of the incoming pilot frequency is low, the loss in the attenuator is reduced; if the incoming level is high the loss in the attenuator is increased. If a large drop in level occurs - for example, as the result of a line fault - the relay circuit is disconnected and an audible alarm given to the carrier attendant.

10.4 Signalling on Carrier Systems. For signalling on a carrier system similar arrangements to those employed over voice-frequency repeatered lines (Paper No. 6) are adopted. Usually 1,000 cycle signalling systems are employed, and in some instances they are an integral part of the carrier system and in others they are separately supplied as 1,000 cycle ringing equipments mounted on separate bays and wired into the various carrier circuits as required.

10.5 The methods employed are similar to the 1,000 cycle signalling circuits previously described, but the modern systems include a number of simplifications. The number of valves has been reduced, and vibrating relays have been replaced by copper oxide rectifiers and direct current relays, which require much less maintenance attention.

/ 10.6

10.6 In one method when 16 cycle ringing current is received from the switchboard the frequency of the carrier supply oscillator is shifted 1,000 cycles and its output interrupted at a 16 cycle rate and applied to the input of the transmitting amplifier. At the receiving end this appears at the input of the ringer receiving circuit as 1,000 cycle current interrupted at a 16 cycle rate. It is then demodulated in a copper oxide rectifier circuit, and the resultant 16 cycle current is amplified and applied to a second rectifier, the output of which is connected to a D.C. relay. Operation of this relay causes 16 cycle currents from a local source to be sent to the switchboard.

10.7 Another method is to feed 1,000 cycle currents from a separate oscillator into the carrier modulator circuit, and interrupt the output at a 16 cycle rate as it is applied to the input of the transmitting amplifier.

10.8 Freedom from false operation on speech in both methods is obtained by tuning the receiving circuit to the rate of interruption, and by providing a slow-operating relay so that the signal must persist for some length of time before 16 cycle current is passed to the switchboard.

11. REPEATERS.

11.1 Carrier System Operation. Repeaters must be employed when the distance exceeds that for which terminal transmitting apparatus is effective in maintaining the transmission level well above the line noise. The function of the repeater is, therefore, to amplify the carrier currents so that they pass on to the succeeding line section at a magnitude comparable to that sent out from the terminals. It is also necessary to avoid power levels sufficiently high to cause interference with neighbouring circuits on the same pole route. Obviously, the design of the repeater with respect to its gain and level carrying capacity, etc. presents a wide range of possibilities depending on the distance of transmission, frequency, etc.

11.2 It has been found most practical to install the repeaters along the route at approximately the spacing of the voice-frequency repeaters on the same wires. This means a spacing of from 150 to 300 miles, and occasionally slightly over 300. To have in the same office both voice-frequency and carrier repeaters reduces the equipment, simplifies the maintenance problem, and makes it possible to use the same sources of power supply. The gain and the load carrying capacity are, therefore determined by this spacing, the gain being controlled by the attenuation loss between the repeaters, and the load carrying capacity by the output level desired because of noise considerations.

11.3 The higher attenuation of the line in the carrier range of

/ frequencies

frequencies means that the carrier repeaters must have a higher maximum gain than that of the voice repeaters operated on the same wires. In a three-channel system, for instance, the gain for the highest frequency transmitted is required to be approximately four times that of the voice-frequency repeater. Whereas gains of the order of 8 to 15 db may be readily supplied by voice repeaters using balance and so-called "two-wire" operation, the 30 db to 45 db gain required by the carrier repeaters necessitates non-balanced or "four-wire" operation or its equivalent, by using different frequencies in opposite directions and directional filters for the prevention of "singing".

11.4 It is required in the design of the directional filters that in each direction the filters must pass a frequency band sufficient to transmit properly the three carrier channel bands. In addition to this, the filters must present a loss outside of the transmission band which is sufficient to prevent the two-way amplifier circuit from "singing".

11.5 A block schematic of a typical repeater for a three channel carrier telephone system is shown in Fig. 21.

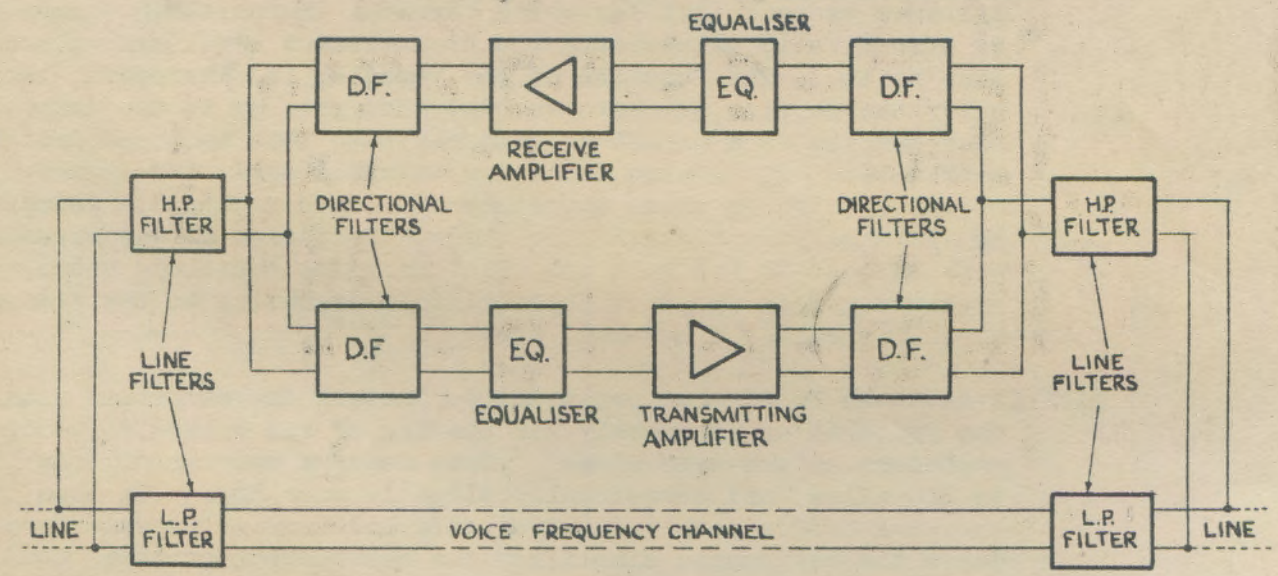

FIG. 21.
CARRIER REPEATER

12. TYPES OF SYSTEMS IN USE. The various types of carrier systems operated by the Department will be dealt with in papers to follow. Briefly, they will include:--

12.1 Type B Telegraph System. (Standard Telephones and Cables.) This system has a maximum capacity of ten duplex channels. The carrier is transmitted for a marking signal and cut off for a spacing signal.

12.2 Type CF Telephone System. (Standard Telephones and Cables.) This is a single channel system. The carrier frequency is suppressed in the modulator circuit and one sideband only is transmitted.

12.3 Types D and DA Telephone Systems. (Standard Telephones and Cables.) These are single channel systems of a later type than the CF system. One sideband only is transmitted to line. The Type D system is designed for use on short lines. The DA system, which is identical with the D but with the addition of a transmitting amplifier, is used for longer lines or where a high sending level is required, and is comparable to the type CF system.

12.4 Types F and FA Telephone Systems. (General Electric Co.) These provide the same facilities as the D and DA types. The FA is equipped with a transmitting amplifier similarly to the DA system; the F system has no such amplifier. One sideband only is transmitted.

12.5 Types SOA and SOB Telephone Systems. (Standard Telephones and Cables.) These are single channel systems of a later type than the D and DA telephone systems, and employ metal rectifier modulators and demodulators and feedback amplifiers. One sideband only is transmitted to line. The Type SOA system is designed for use on short lines. The Type SOB system, which is identical with the SOA but with the addition of a transmitting amplifier and auxiliary filter, is used for long lines or where a higher sending level is required. The ringing equipment and transmission measuring apparatus are included in the terminal equipment.

12.6 Types SA and SB Telephone Systems. (Telephone Manufacturing Co.) These are single channel systems of a recent type. They differ from each other only in that different sideband frequencies are transmitted. They employ metal rectifier modulators and demodulators and feedback amplifiers. The frequency allocation of the S.B. system allows the physical circuit to be used for musical programme transmission if required. The ringing equipments and transmission measuring sets are incorporated in the terminal equipments.

12.7 Type B Three-Channel Telephone System. This was the first three channel system installed in the Commonwealth. The carrier is transmitted to line in each direction for each channel. The ringing circuits are incorporated in the terminal equipments.

/ 12.8

12.8 Type C Three-Channel System. These are manufactured by Standard Telephones and Cables. One sideband is transmitted on each channel. Several Type C systems, differing only in their carrier frequency allocations, are in use to enable several systems to be operated on the same pole route. Ringing equipments, separate from the carrier system, are provided for signalling.

12.9 Type T Three-Channel Systems. These are manufactured by the General Electric Co. The same general remarks concerning the Type C systems apply to the Type T systems.

12.10 Types SOS and SOT Three-Channel Systems. (Standard Telephones and Cables.) These are 3-channel systems of a later type than the Type C systems, and employ metal rectifier modulators and feedback amplifiers. Ringing equipments, separate from the carrier system are provided for signalling purposes. Transmission measuring sets are included in the terminal equipments.

12.11 Types SS and ST Three-Channel Systems. (Telephone Manufacturing Co.) These are 3-channel systems of a recent type, employing metal rectifier modulators and feed-back amplifiers. The two systems are similar but their frequency allocations are staggered to allow of their application to the same pole route. Ringing equipments and transmission measuring sets are provided as part of the terminal equipment.

13. TEST QUESTIONS.

1. What is meant by the terms (a) Upper side band, and (b) Lower side band?
2. What function is performed by the Modulator Band Filters of a Three Channel Carrier System?
3. What means are usually adopted to prevent crosstalk between two three channel carrier systems on the same pole route?
4. Why is it often necessary to have an intermediate repeater station on a carrier line rather than utilize a higher gain at the receiving terminal station?
5. What is an equaliser? Why is an equaliser incorporated in a three channel carrier repeater?
6. Briefly describe "negative feedback". Discuss its advantages applied to an amplifier.
7. Give a circuit of a metal rectifier modulator. Explain its action and how the carrier is suppressed.
8. What are the advantages of "single sideband transmission"?

END OF PAPER.

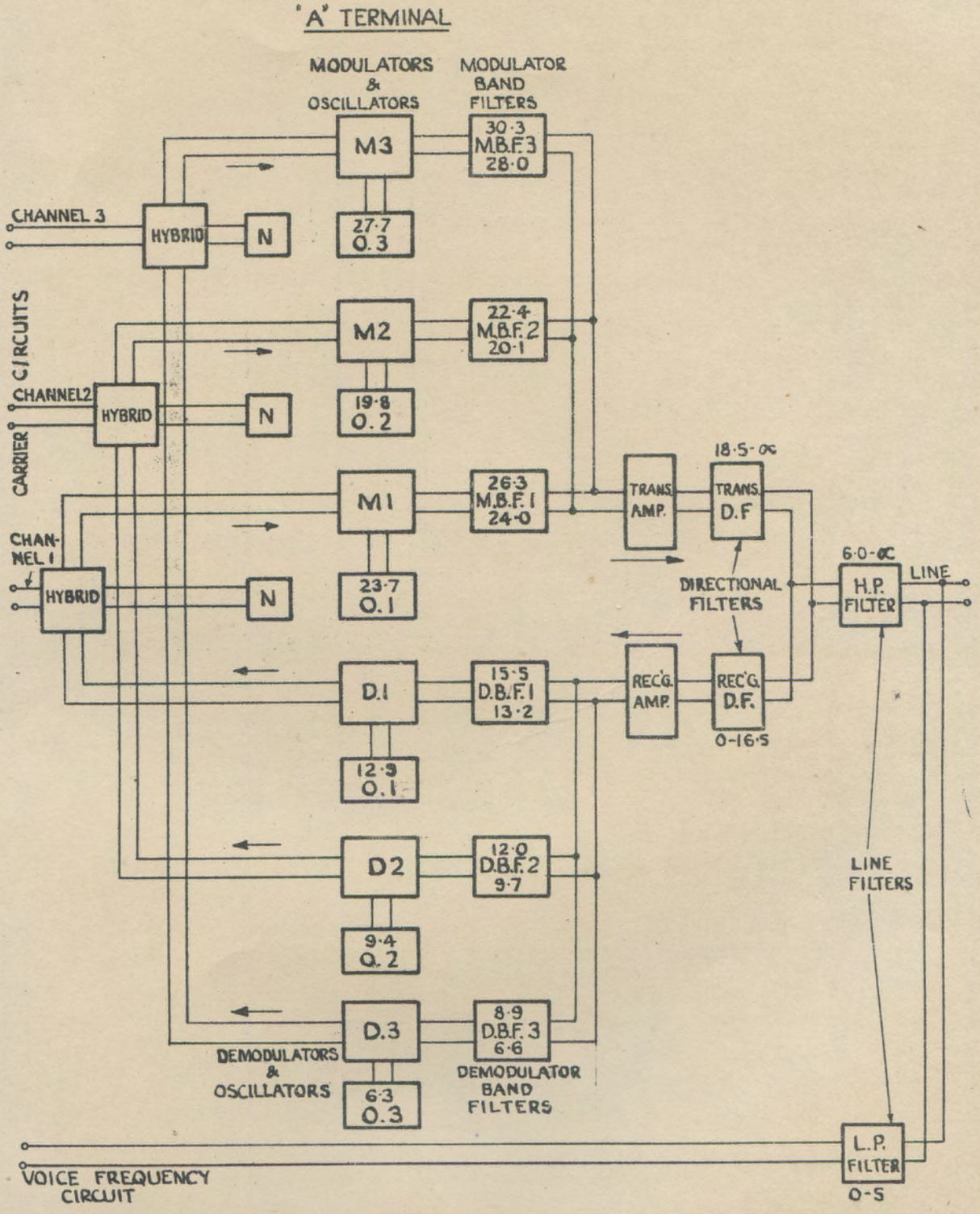

FIG. 9.

BLOCK SCHEMATIC OF 3 CHANNEL (GROUPED) CARRIER SYSTEM

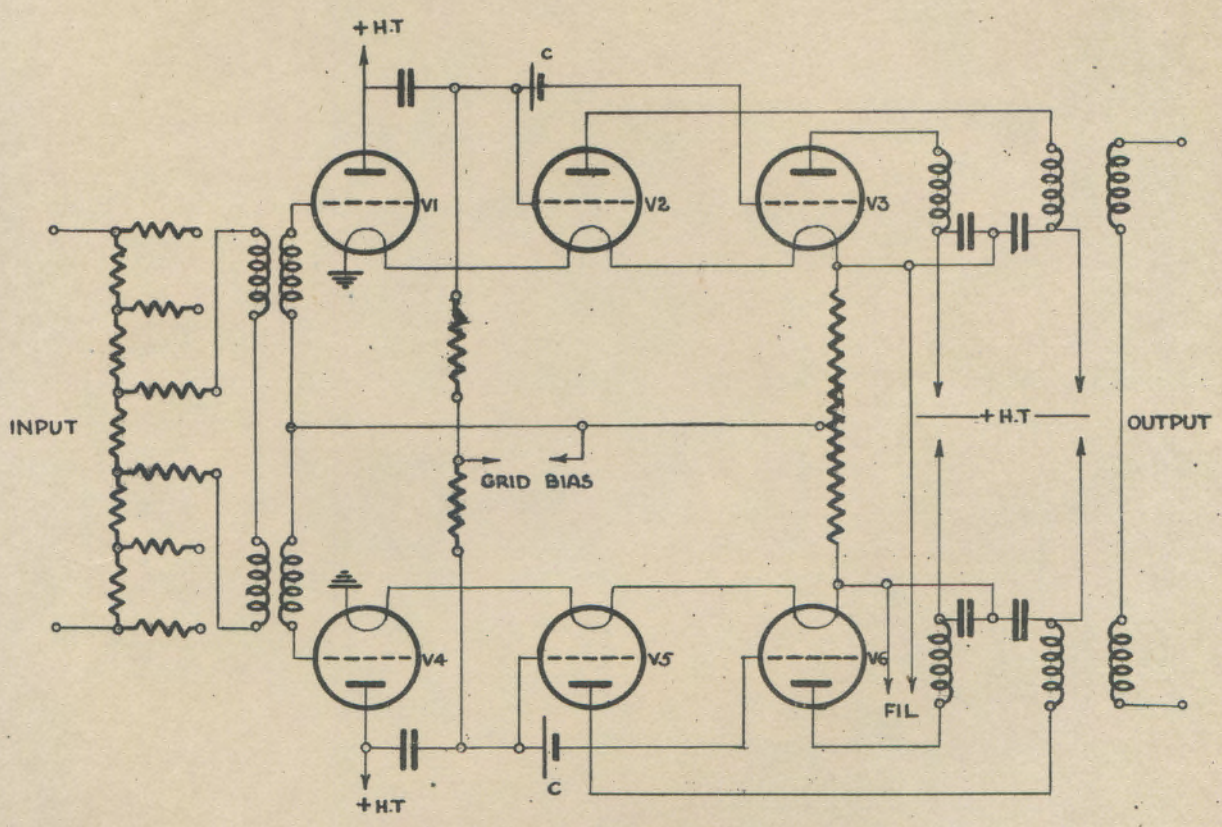

CARRIER FREQUENCY AMPLIFIER.
FIG. 18.

COMMONWEALTH OF AUSTRALIA.

Chief Engineer's Branch,
Postmaster-General's Department,
Treasury Gardens,
Melbourne. C.2.

COURSE OF TECHNICAL INSTRUCTION.

LONG LINE EQUIPMENT.

SINGLE CHANNEL CARRIER SYSTEMS.

CONTENTS:

1. THE TYPE C.F.1 SYSTEM.
2. THE TYPE D AND DA SYSTEMS - GENERAL.
3. OPERATION OF THE D AND DA SYSTEMS.
4. THE F AND FA SYSTEMS - GENERAL.
5. OPERATION OF THE F AND FA SYSTEMS.
6. THE RINGING CIRCUIT, TESTING FACILITIES AND ALARMS.
7. THE VOLTAGE REGULATOR.
8. REPEATERS.
9. THE SA AND SB TYPE SYSTEMS - GENERAL.
10. OPERATION OF THE SA AND SB SYSTEMS.
11. SIGNALLING.
12. TESTING FACILITIES.
13. THE SOA AND SOB TYPE SYSTEMS - GENERAL.
14. OPERATION OF THE SOA AND SOB SYSTEMS.
15. THE RINGING CIRCUIT AND TESTING FACILITIES.
16. TEST QUESTIONS.

1. THE TYPE C.F.1 SYSTEM.

1.1 The C.F.1 system (formerly known as the C.2.F) is a single channel system using a carrier frequency of 7.8 kC, the lower side band being used in one direction and the upper side band in the other. A block schematic of the system is shown in Fig. 1 attached.

1.2 Principle. Voice frequency currents from the switchboard are fed into the hybrid coil and a tap taken from the centre of the hybrid transformer feeds the V.F. to the balanced modulator where it is combined with the carrier frequency of 7.8 k.c. The carrier frequency is suppressed in the modulator and the remaining products of modulation pass through a potentiometer and an amplifier to the transmitting band filter which permits the desired side band to go to line but suppresses the other frequencies.

The transmitting amplifier contains three tubes, viz. one 4101-D preceding two 4104-D's in parallel. Details of the connections are shown in Fig. 2 attached, and described in para. 1.3 below.

On the receiving side the arrangement is similar. The received currents pass via a receiving filter through a fixed attenuator pad (adjusted at installation) to the receiving amplifier, which consists of a single 4101-D valve, the circuit details being given in Fig. 3 attached. The output of this amplifier is fed through a potentiometer into the demodulator and thence via the hybrid transformer to the V.F. line and balance network.

1.3 Amplifiers. The transmitting amplifier circuit (Fig. 2) consists of two stages of amplification. The first stage employs one No 4101-D valve, and the second stage employs two No. 4104-D valves. The valves in the second stage are connected in parallel.

The filaments of the valves are connected in series and are supplied from the 24-volt battery. A retard coil is included in the filament circuit for the purpose of reducing battery noise. The grid voltage for the 4101-D valve is obtained from the voltage drop across the filaments of the valves, and is applied through the secondary winding of the input transformer. The grid voltages required for the second stage valves (approximately 33 volts) are obtained from the grid battery, and are applied to the grids through a 100,000-ohm resistance.

The receiving amplifier consists of a single stage and employs one No. 4101-D valve. The gain is controlled by using a combination of three L-type attenuator pads of values 4, 8 and 16 db connected in the input circuit, and is approximately 20 db with zero pad. The filament

/ of

of this valve is connected in series with the two valves of the demodulator and fed by the 24-volt battery. The grid voltage is 22.5, and is obtained from the grid battery.

1.4 The modulator and demodulator carrier input circuits are both fed from the one oscillator. The output of the oscillator (at 7.8 k.c.) is fed in series to both demodulator and modulator carrier input transformers. The lower side band, that is approximately 5 k.c. to 7.5 k.c., is used for transmission in one direction, and the upper side band 8.1 to 10.6 k.c. in the other direction. The choice of the comparatively low frequencies transmitted gives the advantage of low line attenuation.

1.5 Single channel carrier systems prove very effective in cases where a traffic channel is desired between distant centres which now only have access to each other through intermediate switching stations. An example is given in Fig. 4 where A, B, C, D and E are five stations on a particular route. By installing line filter groups at the five stations mentioned it is possible to operate the carrier directly from A to E without in any way interfering with the working of the existing trunks between the separate offices, as the high frequency or carrier circuit takes its through path via the high pass filters. Dependent upon the length of circuit involved, either carrier transformers or carrier repeaters would be installed between the H.P. filters at stations B, C and D.

1.6 The C.F.1 is particularly useful in providing additional telephone facilities during rush periods without the costly provision of additional physical lines, and in such cases can be switched off when the traffic falls away. Repeaters can be used to extend the range of the C.F.1 carrier and these are practically identical with those used on the 3 channel systems with the exception that the band filters are constructed to pass in each direction the frequencies corresponding to the upper and lower side bands of 7.8 k.c.

1.7 Fig. 5 is a graph which shows the frequencies used in the type C.F.1, C.N.3 and type D carriers. Further information concerning the latter type will be given later, but the graph will enable a comparison to be made of the frequency bands employed and will also be useful to refer to in later papers.

1.8 Ringing Arrangements - C.F.1 System. Ringing on the C.F.1 system is arranged by means of a 1000 cycle signalling apparatus. These systems operate on the suppressed carrier principle and there is no carrier fed permanently to line which can be rectified and used to operate the ringing relays. The 1000 cycle or V.F. signalling method described in Paper 6 was adopted, the ringing equipment being incorporated as an integral part of the C.F.1 system. The description given in para. 1 of Paper 6 should be re-read at this stage.

/ 2.

2. TYPE D AND DA SYSTEMS - GENERAL.

2.1 Following closely on the development of the C.F.1, it was recognised that there was a field of usefulness for a carrier system sufficiently cheap in initial cost and maintenance to allow it to be installed on shorter lines, and the type D system has been designed to meet such requirements.

2.2 Whereas the type C.F.1 is applied usually to lines of 100 miles or over in length, the type D proves economical on lines even as short as 50 miles. The D system, up to the present, has been used without repeaters, its range being extended when necessary by the use of sending or receiving terminal amplifiers only. The system differs considerably from the C.F.1 and is much further simplified. There are less components, and adjustments have been reduced to a minimum. The latter are mostly of a semi-permanent nature, being carried out by altering soldered connections. The electrical features worthy of note are:-

(i) The use of self-oscillating modulators and demodulators, dispensing with the provision of separate oscillators;
(ii) Considerable reduction in the amount of plate battery power required;
(iii) Elimination of grid batteries in the modulator and demodulator circuits;
(iv) A carrier frequency changing arrangement to provide the equivalent of the modulated 1000 cycle ringing current for signalling purposes.

2.3 Apart from its cheapness, another advantage of the Type D is that it can be constructed as a comparatively small unit, completely self-contained and is therefore suitable for providing temporary service in the cases of seasonal increases of traffic such as to holiday resorts during the summer months.

2.4 The type D is a suppressed carrier system but employs a separate carrier frequency in each direction, 6.8 k.c. B to A, and 10.3 k.c. A to B. The lower side bands are used. The normal type D employs no amplifiers and the modulator feeds directly to line through a transmitting band filter. Similarly, the incoming signals pass directly to the demodulator through a receiving band filter. Unwanted frequencies in the demodulator output are suppressed by a voice range filter in front of the hybrid transformer. The system has only a low power consumption and battery eliminators can conveniently be incorporated with the equipment. The line filters form part of the terminal equipment and so the apparatus can be mounted to be easily transported when desired.

/ 2.5

2.5 When a higher transmitting level is required an auxiliary amplifier is added to the output circuit and it is then necessary to also include auxiliary modulator and demodulator band filters. When this apparatus is added the system is known as the type DA; otherwise the equipment is the same as the type D and gives the same facilities.

3. OPERATION OF THE D AND DA SYSTEMS.

3.1 A block schematic of the Type D system is given in Fig. 6 whilst a more detailed diagram is shown in Fig. 7. Considering the transmitting circuit, the hybrid transformer functions as the modulator input transformer and applies the speech potentials received from the voice frequency line to the grids of the valves, where they interact with the carrier and give rise to the modulation products. Most important among these are the upper and lower sidebands.

The carrier is produced by oscillations occurring in the tuned circuit, comprising the condenser C1 and the coil L1, coupling the grid and plate circuits of the valves. Energy from the plate circuits is fed back to the grid circuit via this tuned circuit, with the result that the two valves oscillate in parallel at the natural frequency of the tuned circuit. The amplitude of the carrier is properly proportioned by the circuit elements used.

The frequency at which the circuit oscillates is determined primarily by the inductance of the plate winding of the oscillator coil L1 and the capacity of the condenser C1. In the output circuit the carrier is almost entirely suppressed by means of the balanced connection of the modulator output transformer. The output of the modulator passes then to the modulator band filter, where the upper side-band is suppressed and the lower side-band is permitted to pass out to the line through the high pass filter of the carrier line filter.

3.2 Considering now the receiving circuit, the side-band is received from the line through the high pass filter of the carrier line filter and the demodulator band filter, and is applied by the demodulator input transformer to the grids of the demodulator valves. These valves function in a manner similar to that of the modulator valves. Any carrier frequency current which may be transmitted through the demodulator output transformer DO is further suppressed by the demodulator low-pass output filter to which the low side winding of the output transformer is connected.

3.3 Signalling on Type D. Signalling over the carrier is given by producing at the output of the demodulator 1000 cycle current changing the frequency of the modulator at the transmitting station during the ringing period. The operation will be described from Fig. 7.

/ 3.4

3.4 When the telephonist rings in the ordinary way, relays operate in a circuit tuned to 16 cycles. Contacts of these relays OG and S, shown in Fig. 7, open the circuit to the hybrid transformer and S1 increases the capacity in the oscillator tuning circuit so that the frequency produced is now equivalent to the original carrier modulated with 1000 cycles e.g. the 10.3 k.c. carrier would be changed to 9.3 k.c. which is within the sideband normally transmitted. Upon demodulating this frequency at the distant end a frequency of 1000 cycles would be obtained. Another pair of contacts of S (S2) opens one side of the balanced modulator and allows the carrier - no longer balanced out - to escape to line. A vibrating relay operated when the calling telephonist rings intermittently short circuits this output at approximately 20 cycles per second.

3.5 At the distant terminal the 9.3 k.c. frequency is demodulated to produce 1000 cycles, which operates a 1000 cycle relay in the plate circuit of a thermionic valve amplifier bridged across the balance network side of the hybrid transformer. This is shown in Fig. 7. The input circuit to the amplifier is sharply tuned to 1000 cycles. As the 1000 cycle current is interrupted at 20 cycles per second the 1000 cycle relay T will operate at 20 cycles per second. This in turn operates a polar relay PR in conjunction with a 20 cycle tuned circuit and a double wound relay DC, shown in the inset of Fig. 7. Each D.C. pulse through one winding charges a condenser which discharges through the other winding at the next half cycle. The 20 cycle tuned circuit is sufficiently sharp to be critical to variation of frequency, hence relay DC will not operate on current of frequency much above or below 20 cycles. This principle safeguards the relay from false operation. Ringing is applied as a result of the operation of relay DC.

4. THE F AND FA SYSTEMS - GENERAL.

4.1 These give the same facilities as the D and DA types, but are manufactured by the General Electric Co. The facilities are given, however, by a different circuit design. A block schematic of the F and FA systems is given in Fig. 8. The carrier frequency B to A is 6.867 kC/sec., and from A to B 10.3 kC/sec., the carrier being suppressed and the lower sideband transmitted. Separate oscillators supply the required carrier frequencies. The terminal on the Type FA system is similar to that on the Type F system but for the addition of a transmitting amplifier and auxiliary band pass filters to make it suitable for the transmission of higher sending levels.

4.2 There are in service three general types of F and FA systems known as the Issue 1, Issue 2 and Issue 3 models. The Issue 1 and Issue 2 models are each divided again into two types - one for battery operation of the valves and the other for operation from the A.C. power mains. Otherwise the circuits of the A.C. and D.C. models are similar.

/ 7.3

4.3 In the Issue 3 model, the terminal equipments are designed for battery operation, and when A.C. mains operation is required an A.C. mains unit is added to the terminal. This is a panel comprising the rectifier and smoothing circuits necessary to operate the terminal from the mains. The mains unit for the Issue 3 model is shown schematically in Fig. 9. It consists of copper-oxide bridge-connected rectifier and smoothing circuits. These circuits have been described in Paper No. 3.

4.4 Power Supplies. In all types of battery-operated models, the power supply required is 24 V. for the valve filament and miscellaneous circuits and 130 V. for the anode circuits. In the Issue 1 and Issue 2 A.C.-operated models, the anode voltage is 180 V. to 200 V., and the valve heaters operate from 4 V. A.C. Relays and miscellaneous circuits are operated from 24 volts.

4.5 Voltage Regulation. In all the battery-operated models the leads for the filament circuits are regulated between 20 V. and 21 V. by a motor driven rheostat operated in conjunction with a contact voltmeter. The operation of the regulator is described later. The leads which are regulated for the filament circuit are known as the Silent 24 V. Leads, and if they are derived from a rectifier they are completely smoothed. The 24 V. leads for the relay circuits, etc. (known as the Noisy 24 V. Leads) are unregulated, and are not completely smoothed.

4.6 The Issue 1 and Issue 2 A.C.-operated systems are not fitted with the type of voltage regulator described above. In these cases, the valve heaters, being energised from 4 V. A.C., are supplied from the mains by a step-down transformer, but a Neon lamp connected in series with a resistor across the smoothing circuit of the anode supply provides regulation for that voltage.

5. OPERATION OF THE F AND FA TYPE SYSTEMS.

5.1 The block schematic diagram of the equipment located at one end of the line is given in Fig. 8. This diagram is applicable to all types of F and FA systems.

Transmitting Circuit - General. Speech enters the carrier circuit from the exchange switchboard over the switching pad shown, and divides at the hybrid transformer. One part passes to the demodulator output circuit and is lost. The other part arrives at the input of the modulator. Here, the speech modulates the 10.3 kC or 6.867 kC carrier supplied by the modulator oscillator. The process of modulation results in the carrier and the upper and lower sidebands being produced, and in the suppression of the carrier.

/ 5.2

5.2 Pad Switching. In the "Issue 3" system a 3 db. switching pad is connected between the switchboard and the hybrid transformer. This pad is switched in or out of the circuit by a relay. The relay may be operated over a cailho circuit from the switchboard provided by a centre tapped retard coil connected across the switchboard pair, or it may be operated by a separate connection. It is sometimes operated over the latter automatically from the sleeve of the switchboard jack. The usual arrangement is for the pad to be switched out when the carrier circuit is connected to a trunk line having a high transmission equivalent, and to be left in circuit on subscribers and short trunk connections. The scheme aims at providing a more nearly constant transmission equivalent between any two telephone subscribers.

5.3 Modulator Panel - Issue 1 Model. A schematic diagram of the modulator is given in Fig. 10. For battery operation Type VT.82 valves are used. The speech level into the modulator is set at the time of installation by means of the Audio Input Adjust potentiometer and the tappings on the secondary of transformer TRE. The operation of the modulator proper has been described in Paper No. 7. The potentiometer PA on the "Mod. Osc." panel provides for correcting any residual out-of-balance in the modulator, and so reduces the carrier leakage to a minimum. The band pass filter in the modulator panel passes effectively only the sideband to be transmitted to line. Three stages of amplification are included - one for the speech input before modulation, one for the output of the modulator before sideband selection and one for the transmitted sideband. The sending level for the system is set at the time of installation by means of the Speech Input Level adjustments described above, and by means of tappings on the secondary of transformer TRG. The functions of relay SM are shown in the description of the ringer circuit. The transmitted sideband is passed from the modulator panel to the transmitting filter.

Modulator of Issue 2 Model - A schematic diagram of the modulator panel of the A.C.-operated terminal is given in Fig. 13. It will be seen that this panel is similar to that of the Issue 1 model in general circuit layout. The differences are in the modulator proper, i.e. the circuit of the dry plate rectifier networks and the associated transformers. In this model the strappings on resistors R1 and R2 are set to give a minimum of carrier leakage. The battery operated terminal is similar to the A.C. terminal but a type V.T.82 valve is used.

5.4 Modulator Panel of the Issue 3 Model. A schematic is given in Fig. 14. In this circuit two amplifier stages are incorporated - one for the speech currents before modulation and the other for the output from the modulator. The modulator proper is of the dry plate rectifier "ring" type, which has been described in Paper No. 7. Potentiometer P is

/ adjustable

adjustable by means of a screwdriver, and is provided to balance the circuit to give a minimum of carrier leakage. The speech input level to the modulator is set at the time of installation by means of the preset pad RUA and the tapped secondary of transformer TRA. The latter is adjusted by means of a U-link which connects the grid of the amplifying valve V2 to any one of the tappings. The tappings are connected to link sockets arranged in a circle with the grid link socket in the centre. The output level is set at the time of installation by the preset pad RUC and also the pad RUA and transformer TRA. A Type VT.82 valve is used in the first stage and a VT.108 in the second stage. The two sidebands are passed from the modulator panel to the auxiliary band pass filter in the case of the FA system or to the transmitting filter in the case of the F system.

5.5 Auxiliary Band Pass Filter (Transmitting). This filter is provided only on the FA terminals of the "Issue 3" model. It attenuates all frequencies but the sideband to be transmitted. This single sideband is passed to the auxiliary amplifier. It will be noted from Figs. 10 and 13 attached, that in the Issue 1 and Issue 2 models a similar filter is incorporated in the modulator panel.

5.6 Transmitting Amplifiers. In the Issue 1 and 2 models this amplifier is provided only on the FA system. The circuit of the amplifier of the A.C.-operated system is given in Fig. 15.

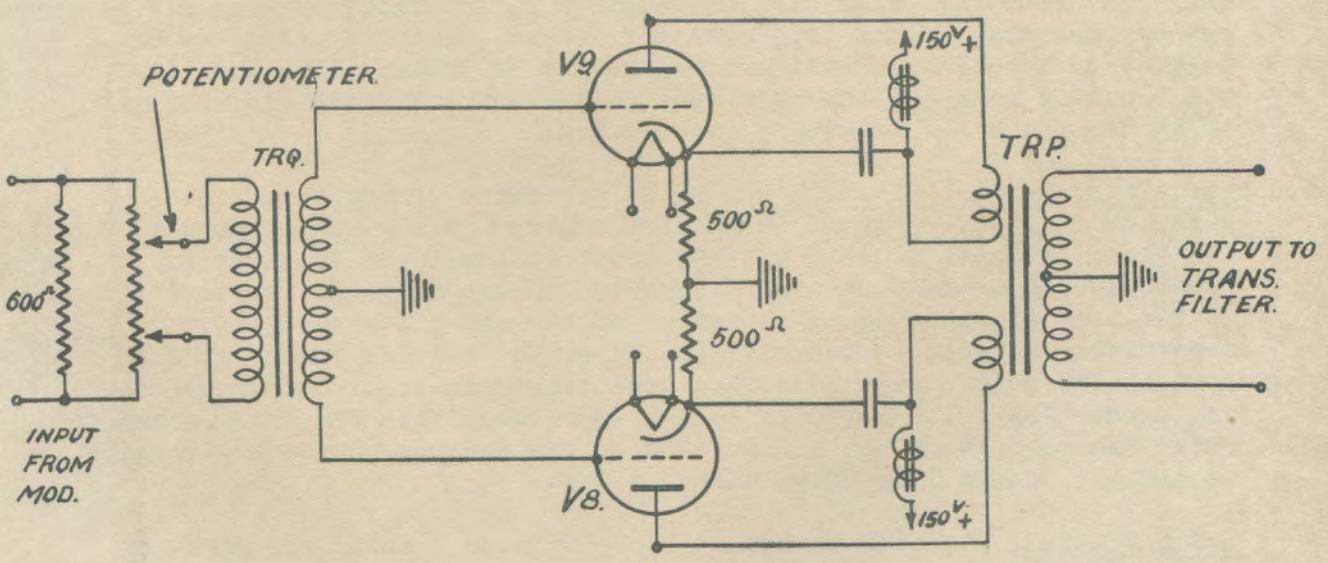

FIG. 15.
F AND FA SYSTEMS.
TRANSMITTING AMPLIFIER
ISSUES 1 AND 2 SYSTEMS.

/ The

The amplifier of the battery-operated system is similar in circuit design, but V.T.108 valves are used. The "Input Adjust" potentiometer is for adjusting the gain and, therefore, the level transmitted to line.

An Auxiliary Amplifier of the "Issue 3" Model is given schematically in Fig. 16. Four Type VT.108 valves are arranged in a parallel push-pull circuit. The preset input pad RUA is set at the time of installation to give the required gain and output level to line.

The Transmitting Filter provided on all the F and FA systems passes only the sideband to be transmitted to line.

5.7 Receiving Circuits. In the F terminals of all models, and in the FA terminals of the Issue 1 and Issue 2 models, the sideband received from the line is passed through the receiving filter to the demodulator. In the FA terminals of the "Issue 3" model, an auxiliary band pass filter is added to the receiving circuit as well as to the transmitting circuit. The Trans. and Rec. filters of the Issue 1 and Issue 2 terminals are adequate for use in F or FA equipment. After demodulation, the speech currents are fed from the demodulator output to the hybrid transformer and thence to the switchboard.

5.8 Auxiliary Band Pass Filter (Receiving). This filter is placed between the receiving filter and the demodulator in the Issue 3 FA system only, in order that a greater attenuation in the receiving circuit may be presented to the transmitted sideband, which is necessary on account of the higher sending level in the FA system. The loss in the blocking range of the receiving filter and auxiliary band filters in tandem gives the necessary attenuation.

5.9 Demodulator Panels - Issue 1 Model. A schematic of the demodulator panel of the A.C.-operated terminals is given in Fig. 17 attached. The "Carrier Input Adjust" potentiometer at the input provides for day-to-day adjustment of receiving gain to compensate for variations in the line attenuation. The action of the dry plate rectifier demodulator network is described in Paper No. 7. The filter at the demodulator output suppresses the unwanted products of demodulation, and passes the voice currents to the valve amplifier via transformer TRJ. The circuit of the demodulator of the battery-operated terminals is similar, but a Type VT.82 valve is used.

Issue 2 Model. As this is similar to the Issue 1 model the same remarks apply but no equalising network is provided and the Carrier Input Adjust Potentiometer is replaced by a key-controlled attenuator. The circuit of the battery-operated terminal is similar, a Type VT.82 valve being used.

Issue 3 Model. A schematic of the demodulator panel of this terminal is given in Fig. 18 attached. This circuit is similar to the earlier models but a valve amplifier precedes the demodulator proper.

/ The

The maximum receiving gain of these systems is 8 db., which is relatively low. On some installations, in order to give a better distribution of the gains, the auxiliary (transmitting) amplifier is disconnected from the transmitting circuit and connected in the receiving circuit.

5.10 Carrier Oscillators "Issue 1 and Issue 2" Models. The oscillators of both these models are similar, a schematic circuit of the alternating current operated terminal being given in Fig. 19.

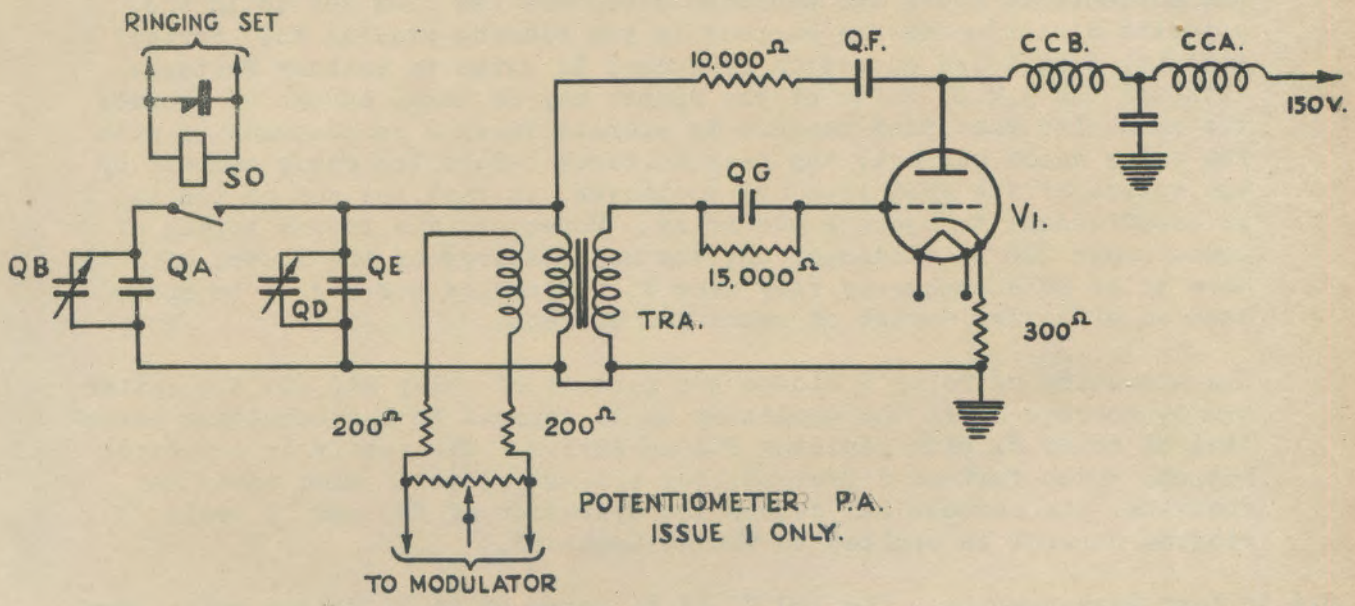

F. AND F.A. SYSTEMS MODULATOR OSCILLATOR.
(ISSUE 1 AND ISSUE 2 A.C.)

FIG. 19.

The demodulator oscillator is similar but, of course, the facility to alter the frequency by relay operation when ringing out is absent. In the circuit of the battery-operated terminal, a VT.82 valve is used.

Carrier Oscillators, "Issue 3" System. The schematic circuit of this system is given in Fig. 20 attached. The remarks in the preceding paragraph apply to this circuit also.

6. THE RINGING CIRCUIT, TESTING FACILITIES AND ALARMS.

6.1 The ringing circuit of the "Issue 3" model is shown schematically in Fig. 11. The ringing circuits of the early models differ only very slightly.

6.2 Ringing Out. The 17 cycle ringing current applied from the switchboard operates relay S. Contacts S2 short-circuit the demodulator output, while Contacts S1 operate relays SO and SM. The contacts of SO connect condensers QD and QE to the modulator oscillator circuit, and thus reduce its frequency by 500 cycles per second. The contacts of SM are in the

modulator circuit, and short-circuit the input while also switching the altered oscillator frequency to the transmitting circuit, where it is passed out over the line. (See Fig. 14.)

6.3 Receiving a Ring. The 500 cycle current produced at the output of the demodulator, after being amplified by the VT.108 valve, is rectified by the assembly REB, and the resulting direct current is passed through winding ed of relay R. The anode current of the valve is passed through winding ab of the same relay. This relay is operated when the sum of the currents in these two windings overcomes the flux set up in the opposite direction by the current in the biasing winding bc. Further immunity from false operation by speech is given by another feature. Although the R.M.S. value of the speech may be large enough to produce the requisite rectified current to operate relay R in conjunction with the valve anode current, the peak voltages reduce the anode current by the action of the grid leak and condenser, so that the sum of the two is insufficient to operate the relay. Moreover, due to the tuning of transformer TRC by condenser QB, the major energy of the speech will have to be at a frequency very near to 500 cycles per second to produce an effective amount of rectified current.

The operation of relay R closes the circuit of relay RA, but the latter cannot operate until the condenser QA is charged to the operating potential of relay RA with resistor RCA in series. The result is a delayed action, which further differentiates against speech. When relay RA operates, its contact RA1 causes the operation of RB, and 17 cycle ringing current is applied to the switchboard.

6.4 Voltage Measurements. The 130 V, 24 V. Noisy or 24 V. Silent supply may be measured on the voltmeter provided in the equipment by operating the key connected to the particular voltage terminals to be measured. The anode circuit of each valve is connected through the contacts of a key, the outer contacts of which are connected to a milliammeter. The anode current in each circuit may thus be measured by operating the appropriate key. A milliammeter and keys are provided in a similar manner for the measurement of the filament current in each circuit.

Test jacks are provided at the input and output of each panel in the system to enable testing and patching at any point.

6.5 Check of Transmission Equivalent. A key is provided on the equipment by which the anode current milliammeter may be used to check the rectified current delivered to relay R from the rectifier assembly REB in the ringing circuit. The measurement of this current is also used as a check of the transmission equivalent of the system. At the time of installation the overall equivalent is measured and noted, together with the reading of the rectified current from REB when a ring is

/ received

received from the remote terminal. Subsequent checks of the rectified current from a received ring will indicate any changes in line attenuation and permit the receiving gain control to be adjusted to give the correct reading. It will be realised that this procedure does not provide measurement of the overall equivalent from switchboard to switchboard, but only in effect from the Trans. Aux. band filter at the sending end to the output of the demodulator at the receiving end.

6.6 Alarms. A relay in the anode lead of each valve circuit is provided to operate an alarm if the anode current fails for any reason. The relay is held operated by the anode current flowing through it, and its back contacts operate the alarm circuit. Alarm relays are also connected to the alarm fuses through which the power circuits are connected to the system.

7. THE VOLTAGE REGULATOR.

7.1 In all but the Issue 1 and Issue 2 A.C. operated equipments, voltage regulation of the 24 V. Silent leads is accomplished by means of a motor driven rheostat operated automatically from a contact voltmeter. Relays and cams and alarm facilities are also included on the panel. The voltage regulator unit is shown schematically in Fig. 12.

7.2 Operation to Correct a High Voltage. Should the voltage across the Silent 24 V. busbars rise above 21 V. the contact voltmeter will close on the "high" side, and if the "high" cam contacts be assumed to be normal, relay B will operate and contacts B1 and B2 will close the circuit to the armature and field winding of the motor in such a manner that the motor is driven in the direction to increase resistance in each rheostat, i.e. to reduce the busbar voltage. As soon as sufficient resistance is inserted to reduce the voltage to the required limits, the contact voltmeter needle will move from the "high" contact, and open the circuit to relay B. Relay B will release and open the circuit to the motor, which will then stop. If the voltage across the busbars should be so high that the total resistance in the rheostats is insufficient to reduce it to the required limits, the motor will keep driving until the "high" cam operates its springsets. This will open the circuit to relay B, and at the same time close the circuit to the "high" alarm lamp. Relay B will release, and open the circuit to the motor.

7.3 Operation to Correct a Low Voltage. Should the voltage drop to less than 20 V., the contact voltmeter tongue will make contact on the "low" side, and close the circuit to the A relay, which will operate

/ and

and in turn close the circuit to the motor. In this case, the action will be slightly different from that taking place when relay B operated. In order to ensure that the voltage is brought up slowly from the "low" value, the resistance YA is connected in series with the motor, thus reducing its speed. The contacts of relay A close the circuit in such a manner that the motor is driven in the direction which will decrease the resistance in the rheostats, thus raising the busbar voltage. As soon as the voltage rises to the proper value, the tongue of the contact voltmeter will move from the "low" contacts, thus opening the circuit to relay A, which will release and in turn open the circuit to the motor. Should the voltage still be too low when all the resistance has been removed from the rheostat, the motor will keep driving until the low cam operates its springsets. This will open the circuit to relay A and at the same time close the circuit to the "low" alarm lamp. Relay A will release, and in turn open the circuit to the motor. Spark absorbing circuits are connected across the contact voltmeter, and also across the field winding of the motor.

8. REPEATERS FOR THE TYPES F AND FA SYSTEMS.

8.1 A block schematic diagram of this type of repeater is shown in Fig. 21. The power, voltage regulation and alarm facilities are similar to those at the terminals. Repeaters for the Issue 2 models only are in service.

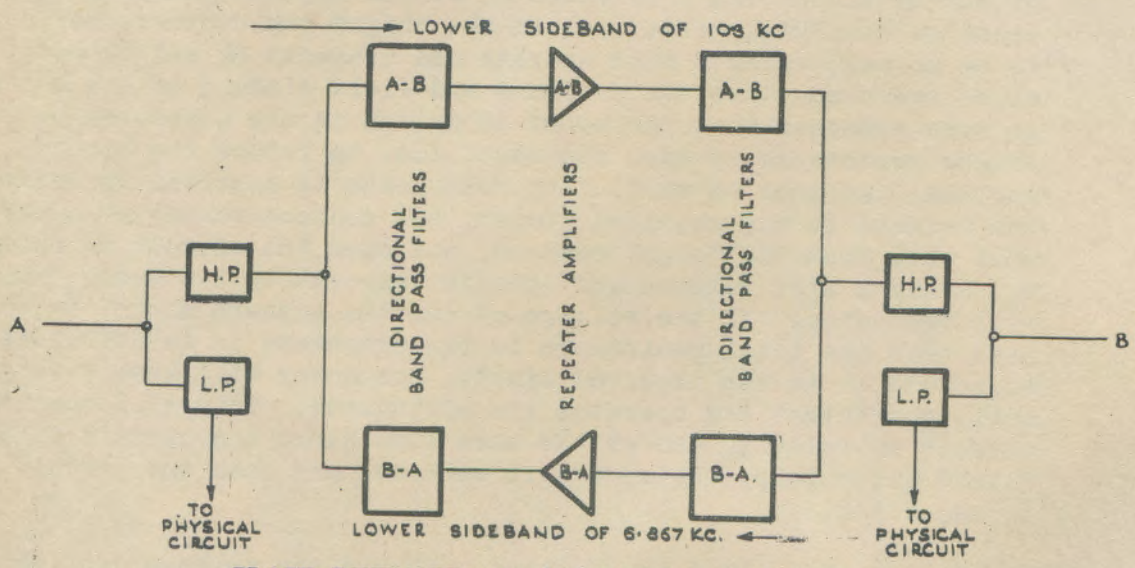

BLOCK SCHEMATIC OF REPEATER - F and FA.

FIG. 21.

8.2 A.C. Operated Repeater. A schematic diagram of the amplifiers of this repeater are given in Fig. 22 attached. It comprises a single valve input stage and a push-pull output stage; type VT.90 or ML.4 indirectly heated valves are used.

/ 8.3

8.3 Battery-Operated Repeater. A schematic diagram of the amplifiers of this repeater are given in Fig. 23 attached. While similar in general circuit layout to the A.C.-operated amplifier, the output stage in this case comprises four valves connected in a parallel push-pull arrangement. This is necessary to provide adequate power handling capacity which could not be met with two of the valves at the anode voltage used. It will be recalled that a higher anode voltage is used in the A.C.-operated equipment.

9. THE SA AND SB TYPE SYSTEMS - GENERAL.

9.1 These systems are manufactured by the Telephone Manufacturing Co. Ltd. They differ from each other only in the different sideband frequencies transmitted. The frequency allocation of the SA and SB systems is as follows:-

System		A to B	B to A
SA	Carrier Frequency	10.1 kC/sec.	6.6 kC/sec.
	Transmitted Sideband	Lower	Lower
SB	Carrier Frequency	6.6 kC/sec.	10.1 kC/sec.
	Transmitted Sideband	Upper	Upper

As the SB system transmits sidebands from 6.9 kC/sec. upwards, permitting operation over line filters with a cut-off frequency of 5.6 kC, it allows the physical circuit to be used for musical programme transmission.

9.2 Power Supply. Power rectifier equipment is included to operate the carrier terminal from the commercial A.C. power mains, but it can be switched to battery operation for which 24 Volt and 130 Volt batteries are required. The valves used in the system are indirectly heated and when the terminal is A.C.-operated the heaters are energised by alternating current from a step-down transformer connected to the mains without further regulation. Ballast lamps (barretters) are provided in the heater circuits when battery operation is used to compensate for fluctuations in the battery voltage. If regulation is considered necessary in the A.C. case, it is provided externally. A 17 cycle per second A.C. supply for ringing and a 4 V. battery for the monitoring telephone and alarm circuits are required.

9.3 A.C. Mains Operated Power Supply. The output from the power transformer is fed to three transformers in parallel. The output of these passes

/ through

through full wave rectifiers and furnish power respectively to the 150 V. anode voltage (H.T.) rectifier, the 24 V. relay voltage rectifier, and the valve heater circuits. The rectifiers are of the dry plate type arranged in conventional full-wave bridge circuits. The anode supply is passed through a smoothing filter which eliminates the A.C. ripple. The 24 volt relay supply circuit is not provided with an elaborate smoothing circuit, as a completely smoothed output is not necessary in this case. A description of the operation of these rectifiers and smoothing circuits is given in Paper No. 3.

9.4 The valve heater supply is 16 volts A.C. Three groups of heaters are energized from this source, each group consisting of several valves in series. Power derived from the rectifier circuit is connected to contacts of a 9-point double throw A.C.-D.C. knife switch. The alternative contacts are connected to the D.C. supply. Fig. 24 shows a simplified schematic of the circuit arrangements.

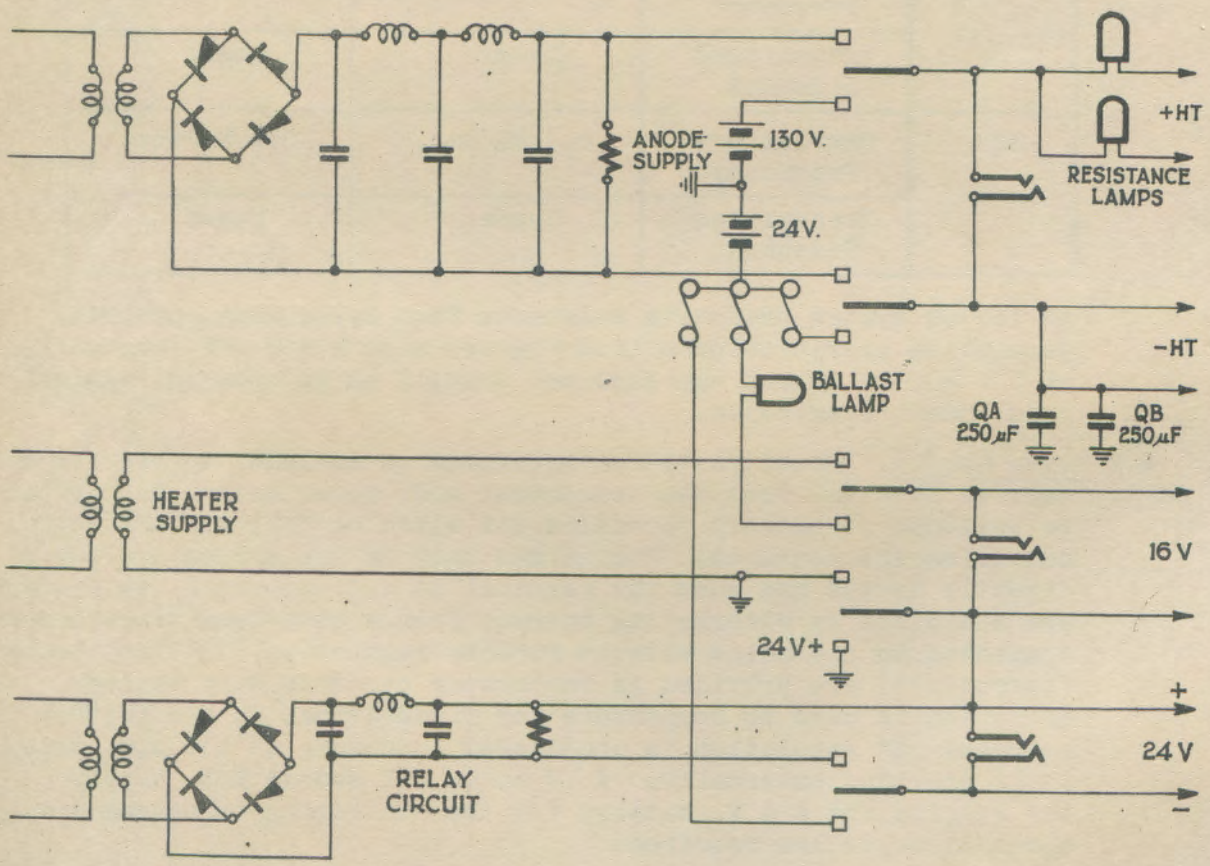

POWER SUPPLY A.C.-D.C. CHANGE-OVER.

FIG. 24.

9.5 D.C. Operated Power Supply. The arrangement of 24 Volt and 130 Volt batteries is standard and the two batteries are connected in series for the anode supply. This gives 154 Volts and enables higher gains and output power than would be possible with 130 Volt only. High-frequency currents find a low impedance path from the H.T. negative bus-bar via condensers QA and QB to earth. A ballast lamp in each heater circuit lead provides regulation, and reduces the voltage to the appropriate value. The jack connected to each output circuit enables the voltage to be checked with a plug-ended voltmeter.

10. OPERATION OF THE SA AND SB SYSTEMS.

10.1 Transmitting Path. Fig. 25 attached, shows a block schematic of the system. The speech currents from the "Exchange Circuit" on left of the diagram pass through the back contacts of relay RA (on the Hybrid Panel), windings of transformer XB, the switching pad and its relay contacts to the hybrid transformer. The RA relay belongs to the ringing circuit which is described later.

Pad Switching. The switching pad can be set, when installed, to 0 db., 3 db., or 6 db., and it may be switched out by the operation of relay RB, which can be operated either over a cailho circuit from the switchboard via the retard coil XA, or by a special connection to the relay clear of the retard. Pad switching is used to compensate for the different transmission equivalents met with in a trunk line network, to obtain a more nearly constant equivalent between any two subscribers.

The Hybrid Transformer. The operation of this transformer is described in Paper No. 5. The speech current transferred to the transmit path passes via the back contacts of the relay in the ringer oscillator circuit to the modulator or, as it is called in this particular system, the Modulator Limiter. The RA relay contacts across the output of the Hybrid Transformer are part of the ringing circuit which is described later.

10.2 The Modulator Limiter. A schematic circuit diagram of the Modulator Limiter and associated apparatus is given in Fig. 26 attached. The modulator is of the copper-oxide rectifier type, described in Paper No. 7. It will be recalled that the current through the modulator rectifier elements due to the carrier oscillator must be higher than that due to the speech current. If the speech current exceeds the carrier current (assuming the latter to be constant) the output does not increase in proportion to the voice input and this circuit ensures that the speech does not exceed an appropriate value. Due to this "limiting" effect the makers of this system have called the circuit a Modulator Limiter.

The carrier is supplied from the oscillator marked "Mod. Osc." in Fig. 25, and enters the modulator limiter at terminals 12 and 18 of Fig. 26.

As explained in Paper 7, the rectifiers act as switches which are opened and closed at the carrier frequency. Therefore, when speech current from terminals 11 and 17 flows through the primary of the transformer UBA, current induced in the secondaries is directed by this switching action alternately through windings 11-12, 9-10 and 6-5, 4-3 of the output transformer UBB. The current induced in the secondary of this transformer is, therefore, speech current reversed at the carrier frequency. In a wave form of this nature neither the speech frequencies nor the carrier frequency are present. The two predominant components are the upper and lower sidebands. Harmonics of these frequencies are also present but at a low level and they are readily eliminated by filters at a later stage.

10.3 The two sidebands from the modulator flow through the gain control potentiometer UAA, and are applied to the grid of the amplifying triode VA. The potentiometer UAA is the "Voice In" potentiometer by which adjustments may be made to the transmitted power level. Grid bias for VA is derived from the D.C. voltage drop through Resistor UAB which is by passed by condenser UAE. The resistor UAC and condenser UAD comprise the decoupling circuit for the anode voltage supply.

10.4 The Modulator Amplifier. As shown in Fig. 25 this follows the Modulator Limiter in the transmitting path. Fig. 27 gives the schematic circuit; P.A.F. is a 3 db stabilising pad. The relay contacts of RA are part of the ringing circuit. The potentiometer P.A.A. is set at the time of installation to give the required gain which is applied to the primary of transformer P.A.J. the secondary of which feeds the control grid of the amplifying pentode VB. Grid bias for VB is provided from the D.C. voltage drop across resistor U.A.J. with by-passing condenser U.A.D. Resistors U.A.G. and U.A.H. form a potentiometer from which voltage is applied to the screen grid of VB; condenser U.A.C. connects the screen grid to earth for alternating currents. Valve VB is resistance-capacity coupled to the amplifying pentode VA.

The 200 ohm resistor YB is connected in series with the grid of VA to prevent high-frequency oscillation. U.A.F. is a voltage dropping resistor, which is decoupled by condenser U.A.B. U.A.K. is the inter-valve coupling resistance and U.A.M. is the coupling condenser.

10.5 This amplifier is a negative feedback type, the principles of which were described in Paper No. 7. From the output of the second valve VA energy is fed back in two ways. The transformer XB which is connected across the output of VA feeds back from its secondary winding a voltage across the resistors PAN, PAL, PAK and PAM, and the voltage across PAM is applied as reversed feedback to the grid of the first valve VB. Further, it will be seen that the resistor YA forms part of the output circuit of valve VA. The voltage developed from the alternating current through YA is applied as reversed feedback to the grid of VA. The optimum value of grid bias resistance for valve VA of the amplifier is 400 ohms, and this is made up of the

700 ohm resistor YA and the 940 ohm relay RB. The relay has a high reactance to carrier frequencies, so that all of the alternating current passes through the 700 ohm resistance YA. The screen grid of VA is supplied with the appropriate voltage, and decoupled by the resistor condenser unit QYB. The anode of VA is supplied with H.T. voltage via the primary of XB, and decoupled by condenser UAA. A stabilising pad of 3 db. is connected in the output of the amplifier.

Transmitting Band Pass Filter. Referring to Fig. 25, the Transmission Band Pass Filter suppresses all frequencies but the sideband to be transmitted to line.

The transmitted current is prevented from entering the receiving circuits by the Receiving Directional Filter, and flows direct to the line High Pass Filter and thence to line.

10.6 The Receiving Path - Filters. Refer to Fig. 25. The incoming sideband current is prevented from entering the exchange physical circuit by the Line Low-pass Filter and flows instead through the HP filter through the Receive Directional Filter to the Receive Band pass Filter. In the Receiving Band Pass Filter all frequencies but the required sideband are suppressed and from there the current flows to the Demodulator.

The Demodulator. This is shown in Fig. 28, which is read from right to left. The incoming sideband passes through the 3 db. stabilising pad to the gain control potentiometer UAA, which enables day to day adjustments of the equivalent of the channel to be made. The current tapped off goes to the primary of the input transformer UAB, the secondary of which leads to the control grid of the amplifying pentode VA.

Grid bias for VA is derived from the D.C. voltage drop over resistor UAC. The Screen grid voltage is applied and decoupled via the resistor and condenser unit QYB. Amplified current from the anode flows through the primary of the demodulator unit input transformer UBA and returns to the cathode through the condenser QA and resistor UAC. The A.C. voltage developed across UAC is applied to the grid of VA as negative feedback.

10.7 Due to the switching action of the rectifiers under the influence of the carrier current, the sideband currents induced in the secondaries of transformer UBA are reversed or commutated at the carrier frequency through the primaries of the output transformer UBB. As a result of this process of demodulation two sidebands appear in the secondary of UBB. One - the wanted - is within the voice range. The other lies in the carrier range. Its level is normally low and is further reduced by a low-pass filter consisting of resistors UBM, UBN and condensers UBP, UBQ. Transformer UBB requires a secondary load which is effectively provided by the resistors UBJ, UBK, bridged across the primaries.

/ 10.8

10.8 The wanted and the attenuated unwanted bands are applied to the grid of the amplifying triode VB. Grid bias for this valve is obtained from the D.C. voltage drop across the anode current fail relay RA. This relay presents a high impedance to the alternating currents. These flow to the cathode via the 50 mf. condenser QB, which presents a negligible impedance, in series with resistor UBL (600 ohms) and condenser QC (0.1 mf) in parallel. The A.C. potential developed across these two last mentioned components is applied as negative feedback to VB. Anode voltage for VB is supplied and decoupled via the resistance condenser unit QYA. The output from the panel is delivered from the transformer XA to the Demodulator Low Pass Filter.

10.9 As shown in Fig. 25, the circuit leads from the Demodulator to the Demodulator Low Pass Filter. This suppresses all but the voice frequencies. A 3 db pad is connected in the output of the filter in order that the termination is practically resistive at all frequencies. The circuit connects then to the hybrid transformer, a monitoring jack being connected across the input winding.

10.10 Carrier Oscillators. The Modulator and Demodulator oscillators are similar in circuit design, the schematic of which is given in Fig.29.

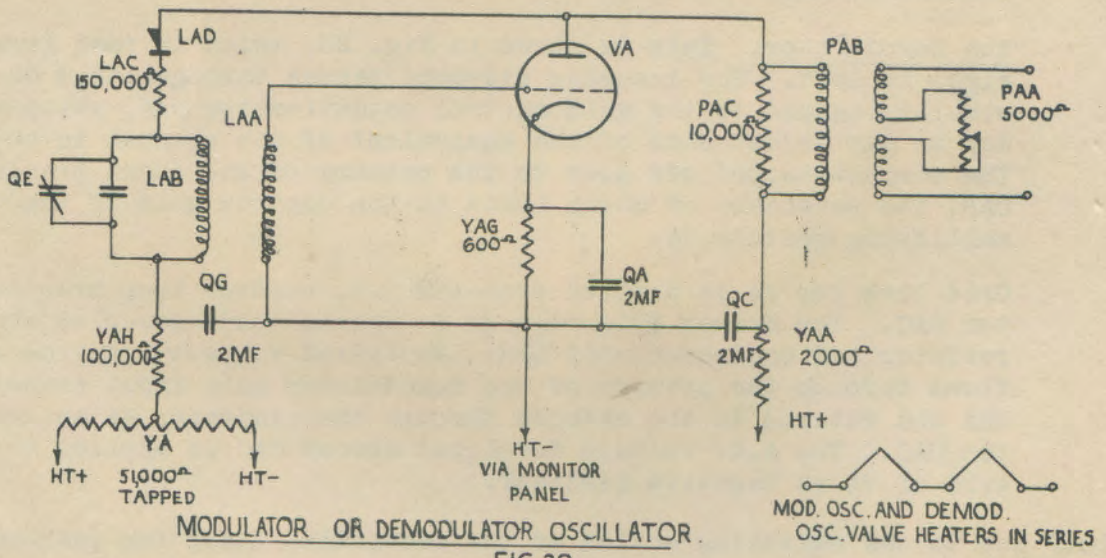

MODULATOR OR DEMODULATOR OSCILLATOR.

FIG.29

From the anode of valve VA is a circuit consisting of rectifier LAD, resistor LAC, the primary of transformer LAA (which is tuned to resonate at the required frequency by the condensers LAB and QE) and the condenser QG. The circuit is completed to the cathode through condenser QA and/or resistor YAG.

/ The

The potential induced in the secondary of LAA is applied between the grid and cathode of valve VA. The phase is such that the valve tends to oscillate at the resonant frequency of the tuned circuit. Grid bias for VA is derived from the voltage drop through resistor YAG.

10.11 The rectifier LAD is polarised by means of a potential tapped from the potentiometer YA. Thus only when the potential of the anode of valve VA rises above that of the tapping point YA does current flow through the resonant circuit. Further, the current which flows tends to charge the condenser QG to a potential even higher than that of the tapping point which tends to reduce the current flowing to a value where its energy is equal to that dissipated in the resonant circuit and a state of equilibrium is reached. The potential built up across the condenser QG is governed by the resistor YAH through which the charge leaks away. The effect is that the resonant circuit is energised by means of a surge or impulse during only a small part of each cycle.

The output circuit is taken from the anode of valve VA through the primary of transformer PAB and condenser QC and returns to the cathode through condenser QA and/or resistor YAG. Current induced in the secondary of transformer PAB flows through the regulating resistor PAA to the output terminals 9 and 15. Anode current from a 150 V. source flows from terminal 2 through resistor YAA (decoupled by condenser QC) and through the primary of transformer PAB (in parallel with resistor PAC) to the anode 1 of valve VA. Current flows from the cathode through the bias resistor YAG to terminal 11 and through an external cathode current measuring circuit to H.T.

11. SIGNALLING.

11.1 The application of the signalling arrangements are shown in the general block schematic on Fig. 25. In ringing out the 17 cycle per second ringing current is applied from the exchange circuit and passes over the back contacts RA1 and RA2 of relay RA on the hybrid panel, and the primary of the input transformer to the winding of relay RB in the ringer circuit. A copper oxide rectifier is connected across this relay, which therefore is operated by the 17 cycle A.C. This relay performs three functions.

11.11 It connects 20 V. negative battery via resistor YB and contacts RB1 to the ringer oscillator circuit, shown in Fig. 25. As will be described below, this results in the 1000 cycle oscillator "starting up" and its output is applied to the input of the modulator where it is modulated and passed through the transmitting circuit in the same manner as the voice.

11.12 Relay RB also applies 17 cycle ringing supply via contacts RB3 and RB4 to relay RA in the Modulator Amplifier Panel. The latter relay is connected with a condenser, a resistor,

/ and

and a copper oxide rectifier in such a way that it vibrates under the influence of the 17 cycle current. Its contacts RA1 thus short circuit the input of the Modulator Amplifier at the ringing frequency, and the sideband from the 1000 cycle tone is passed out to line interrupted at 17 times per second.

11.13 Further, RB prevents the operation of relay RC in the ringer circuit as there may be a tendency for RC to be operated by echo currents from the remote terminal station.

11.2 The V.F. Ringing Oscillator is provided for ringing out over the carrier channel, and also as a source of 1000 cycles per second testing power. The circuit comprises a single valve oscillator. The output may be adjusted and locked by means of a screwdriver adjusted potentiometer. The oscillator is normally paralysed, the input to the grid of the valve being short-circuited through contacts of relay RA (de-energised) and key contacts KDA and KDB. The operations of any one of these allows the circuit to oscillate. Relay RA operates for ringing out and the keys are part of the testing equipment. When outgoing ringing operates relay RB in the ringer circuit, this operates relay RA of the ringer oscillator and contact RA2 breaks the loop across the grid circuit of the oscillator, allowing it to generate. Contacts RA1 and RA3 connect the oscillator output to the modulator limiter and thence to line.

11.3 Receiving a Ring. The received ringing signal passes through the demodulator, and after demodulation flows through the Demod. Low Pass Filter. It will be noticed from Fig. 25 that the V.F. ringer circuit is connected across the output of this filter via two series resistors. The received 1000 c.p.s. current interrupted at 17 c.p.s., therefore, appears at the input of the ringer circuit. Referring now to Fig. 30, the received current comes in at the right to the transformer XA, and the secondary potential is applied through resistor YA to the grid of the amplifying triode VA. Grid bias for VA is derived from the D.C. voltage drop across relay RA in the cathode circuit, which is by-passed by condenser QA. Anode voltage for VA is fed via the decoupling unit QYA through the primary of transformer LAA. Amplified current from the anode of VA excites a highly selective circuit consisting of the winding of transformer LAA tuned to 1000 c.p.s. by the condenser LAB. The current returns to the cathode through condensers QYA and QA.

11.4 Current induced in the secondary of LAA is rectified by the dry plate rectifier UAA and charges condenser UAB. The potential built up across the latter is applied to the control grid of the pentode VB. Grid bias for VB is obtained from the preset potentiometer YB through smoothing units QYB, QYC and QYD.

The cathode of YB is connected to earth rather than to H.T. neg. because on battery operation H.T. Neg. is 24 V. below earth potential, and this voltage is required to supply its grid bias. On

A.C. operation H.T. neg. is connected to earth. The screen grid of VB is connected to H.T. positive via the decoupling unit QTE. H.T. positive is fed to the anode of VB via choke XB, relay RD and dry plate rectifier ZB, and is decoupled by condenser QB.

11.5 The bias is such that the anode current of valve VB in the quiescent state is insufficient to operate relay RD. If the potential applied to the control grid is due to an uninterrupted signal current of high level, the anode current reaches saturation value, but the relative resistance values of the two parallel circuits and the adjustment of the relay are such that the latter still fails to operate.

11.6 If, however, the signal current is interrupted, the impedance offered by the choke in parallel with RD to the resultant alternating anode current is sufficient to divert a larger proportion of the anode current through the relay RD which operates. The rectifier ZB ensures that the current through the relay is unidirectional. Relay RD is sluggish in operation, and a minimum of three successive interruptions is required to operate it. Condenser QC passes to earth any high-frequency component in the anode circuit. Contact RD1 operates relay RC and, at contact RC1, connects 24 V. negative through resistor YB to relay RA in the hybrid panel shown in Fig. 25. The latter relay operates and connects 17 cycle ringing current to the local exchange via contacts RA1 and RA2. Contact RA3 short circuits the input to the modulator to prevent any out of balance at the hybrid from causing a ring to be returned to the distant terminal.

12. TESTING FACILITIES.

12.1 General. A Transmission Measuring Set, comprising an attenuator and a level indicator, is provided. Power for testing purposes is derived from the 1,000 cycles per second ringing oscillator. The testing arrangements are given in Fig. 31. The oscillator has its output adjusted for ringing purposes usually to approximately 0.25 V. into a 300 ohm load. For test purposes, this output may be increased, by means of the "Osc. Out" screw adjusting potentiometer on the oscillator panel, to 1.5 Volts into a 300 ohm load or to 2 Volts into a 600 ohm load. The attenuator is of the balanced H type and has a characteristic impedance of 300 ohms. It has four settings (0, 10, 20 and 40 db.) controlled by the operation of one of three keys provided for the purpose. With these keys normal, no attenuation is inserted. The output of the attenuator can be connected to the level indicator by operating key KDB. The level indicator has an unbalanced input impedance of 50,000 ohms, which may be modified by means of keys to 600 or 300 ohms. It has three ranges (-20 to +10 db., -10 to 0 db. and 0 to +10 db.) referred to 0.775 Volt, that is, 1 mW into 600 ohms, or 2 mW into 300 ohms. Its frequency range is 50 to 50,000 cycles per second.

/ 12.2

12.2 Level Indicator. The "Gain Set" jacks connect to the input of the Level Indicator. A voltage at the input terminals is applied to the 50,000 ohm potentiometer and, depending on the position of the range key, current will flow through condenser QE, the "calibrate" Potentiometer PA, resistors YS and YR and condenser QA. The three positions of the "range" key alter the scale reading of the Level Indicator by 0 db, -10 db, and -20 db.

A termination key provides for the 50,000 potentiometer to be shunted by 300 ohms, 600 ohms or left unshunted to match 300 ohm or 600 ohm circuits or for measurements across a terminated circuit. The potential across resistors YR, YS and part of potentiometer PA is applied between the grid and cathode of the triode valve VA. The internal anode resistance of valve VA forms one arm of a Wheatstone bridge; the other three arms consist of resistors YAE and YAF in series, resistors YAG and YAH in series, and resistor YT in series with the variable "Set Zero" resistor PB. The bridge is energised from the H.T. supply via the resistor YU and decoupling condenser QD.

12.3 To use the Level Indicator, the Set Zero resistor is adjusted with no input applied to the set, until no current flows through the meter AA, i.e. when the bridge circuit is balanced. When an alternating potential from the input is applied to the grid of valve VA, the internal anode resistance increases, throwing the bridge out of balance and causing current to flow through the meter AA via the "meter off" key contacts. Any A.C. in the anode circuit of Valve VA is effectively short-circuited by the condenser QF.

12.4 Measurement of Valve Cathode or Anode Currents. The H.T. negative lead from each valve circuit is passed via a key circuit on the monitoring panel to earth. On operating the key for a particular valve circuit a milliammeter is inserted in the circuit by which the cathode or anode current may be read.

12.5 Anode-Current Fail Alarms. As stated previously, the valves in the system are arranged in groups, the heaters of each group being connected in series. One of the valves in each group has a relay connected between the cathode and H.T. negative, which is held in the operated position by the anode current which flows through it. If the heater of one of the valves becomes open circuit, all the valves in the group will be rendered inoperative, and the relay will be de-energised. The relay contacts will close and operate an alarm buzzer.

13. THE SOA AND SOB SYSTEMS - GENERAL.

13.1 These systems are manufactured by Standard Telephones and Cables Ltd. They are similar except that additional gain is provided in the SOB system, making it suitable for operation without an intermediate repeater over lines of higher attenuation, and allowing for co-ordination of levels with 3-channel systems which may operate on the same pole route. Systems of the type of the SOA and SOB are sometimes termed "Short Haul" and "Long Haul" systems respectively.

13.2 Frequency Allocation. Two carrier frequencies are used, one for each direction of transmission. Only the lower sideband in each case is transmitted. The frequencies used are -

	Carrier (Kc/sec.)	Sideband Range (Kc/sec.)
A to B direction	10.3	7.5 - 10.0
B to A direction	6.2	3.4 - 5.9

Gains and Levels: The maximum output level in the SOA system is +6 db., and that of the SOB system is +18 db. (Reference level 5.9 mW.) The maximum receiving gain of both systems is 16 db.

13.3 Power Supplies. The filament and plate supply voltages are:-

Filament Voltage Supply - 24 V. ± 3V.
Plate Voltage Supply - 130 V. ± 5V.

Indirectly heated valves are used and, with battery operation, the cathodes are connected to 24 Volts which furnishes an anode voltage of 130 + 24 = 154 volts.

These systems are designed to operate from the normal station supplies or direct from an A.C. mains unit mounted on the equipment. Tappings are provided on the mains transformer to cater for the various mains voltages met with in practice.

14. OPERATION OF THE SOA AND SOB SYSTEMS.

14.1 Transmitting Speech. A block schematic of the system is given in Fig. 32. The switchboard is connected to the system proper via the Switchboard Termination Panel, which contains the relays and pads which may be connected at the time of the installation of the system to provide "pad switching" or "tail-chasing" facilities. A straight-through connection may be made from the switchboard to the 4-wire terminating set (hybrid) if desired.

/ 14.2

14.2 The 4-Wire Terminating Unit. This performs the functions of the usual hybrid transformer, i.e. it connects the 4-wire circuit to the 2-wire termination, and is used with a network which simulates the impedance of the 2-wire line. The unit in this system, however, comprises two separate transformers marked T1 and T2 in Fig. 33 (a) which shows the connections.

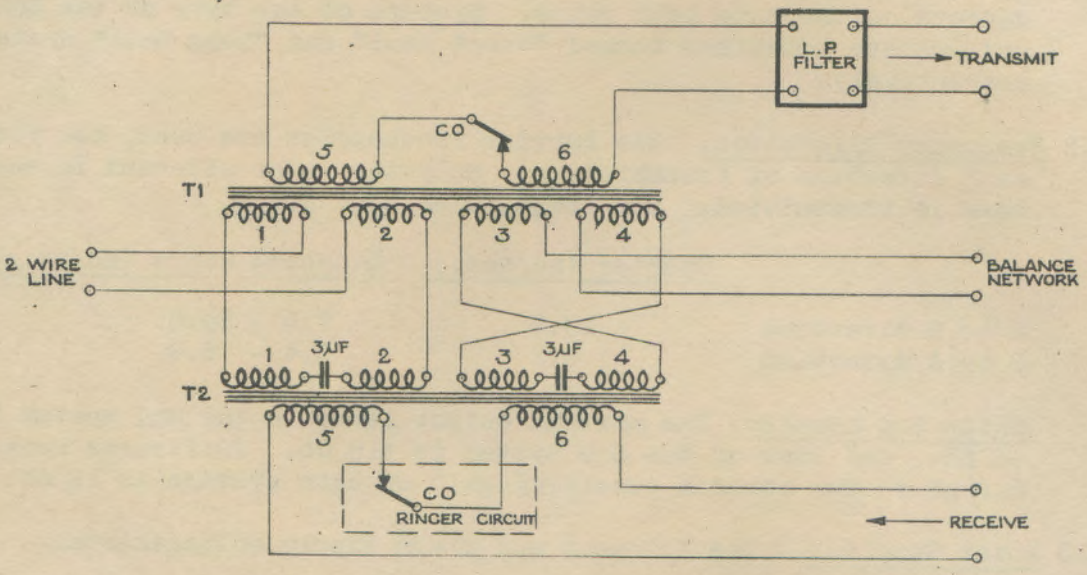

FOUR WIRE TERMINATING UNIT.

FIG. 33 (a).

Current coming in from the line side flows in windings 1 and 2 of T1 and windings 1 and 2 of T2. These produce secondary currents in windings 5 and 6 of T1 and 5 and 6 of T2. Secondary currents are also produced in windings 3 and 4 of T1 and 3 and 4 of T2, but these currents are in opposite directions and, if the coils are balanced, no current will flow in the network impedance. Thus, assuming perfect balance, the energy received from the 2-wire line will divide equally between the transmit and the receive circuits, the portion in the transmit side proceeding to the modulator via a low pass filter which prevents unwanted frequencies from passing and that in the receive side being dissipated in the output circuit of the Receiving Amplifier. The loss from the line side to transmit side, theoretically, will be 3 db.

14.3 Consider now the case of currents arriving from the receive circuit and applied to windings 5 and 6 of T2. These currents will give rise to equal secondary currents in windings 1 and 2 and 3 and 4 of T2, which

/ flow

flow respectively through windings 1 and 2 and 3 and 4 of T1. Since the coils are balanced and the impedances connected to the line and net sides are equal, the currents in the line and net sides are equal. Therefore, as the currents in windings 1 and 2 and 3 and 4 of T1 are in opposite directions, no current flows in windings 5 and 6 of T1. Thus, half the energy from the receive circuit passes into the 2-wire line, while half is dissipated in the network and the loss from receive side to line side, theoretically, is 3 db.

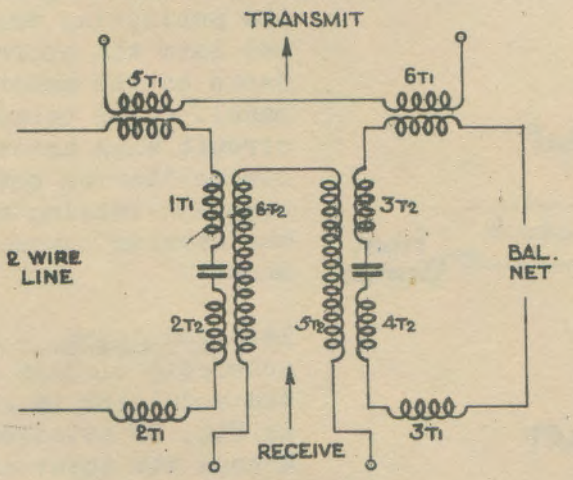

4 WIRE TERMINATING UNIT.

FIG. 33 (b).

It will be seen that this action produces a result identical with that of an ordinary hybrid transformer. A simplified layout of T1 and T2 is given in Fig. 33 (b), in which the similarity to the hybrid transformer will be more evident.

14.4 As in the case of all hybrid connections it is not possible to obtain ideal coils or perfect balancing with the result that, even with the 2 wire and network terminals closed through carefully matched resistors, the loss from receive to transmit is not infinite, but of the order of 60 db. Similarly, the loss from 2 wire to transmit and from receive to 2 wire will not be 3 db. but of the order of 3.4 db. The factors which in practice limit the degree of balance and, therefore, the loss from receive to transmit are the terminations which are applied to the 2 wire and network sides. Since the 2 wire terminals are usually liable to be connected to extensions of various lengths and types of cable, the impedance across these terminals may vary widely. In view of these facts, the highest loss likely to be obtained in service from receive to transmit is about 40 db. and in many cases considerably worse.

The connections between windings 5 and 6 of T1 and 5 and 6 of T2 are broken during outgoing and incoming ring by means of the C.O. relay in the ringer circuit. This open circuits the transmitting and receiving sides of the 4-wire terminating circuit. This, during outgoing ringing prevents the passage of 17 p.s. current to the modulator, and during incoming ringing prevents the transmission of 1,000 p.s. current to the switchboard.

/ 14.5

14.5 Monitoring is provided as shown in Fig. 34. It comprises two monitoring coils, one in the transmit and one in the receive sides of the circuit, by which the attendant can monitor from the monitoring panel. These facilities are obtained by plugging the monitoring telephone set into the appropriate jacks on the monitoring panel. The telephone circuit when arranged for monitoring both ways and talking on the carrier channel is shown.

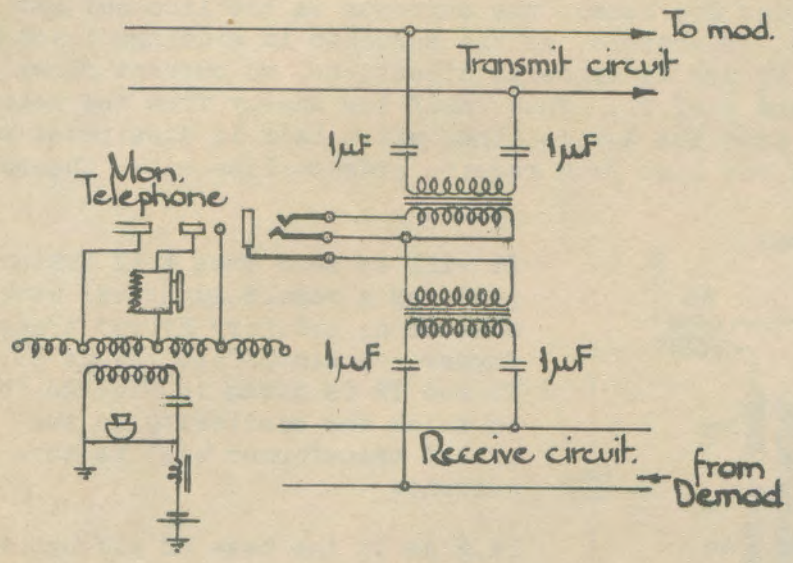

FIG.34.

MONITORING CIRCUIT.

14.6 Modulator. - A schematic circuit of the modulator is given in Fig. 35 attached. Across the input of the modulator is connected a voltage limiter of the neon lamp type already described in Paper No. 7. A preset pad is also provided at the input of the modulator to reduce the incoming speech level to the correct value for the modulator. Following the pad there is an equaliser consisting of L1, R5 and C1 connected in shunt across the circuit to correct for the attenuation distortion over the sideband of the band filter characteristic and, in conjunction with a similar equaliser in the demodulator circuit, to make the overall quality characteristic substantially flat over the range of frequencies transmitted by each channel.

14.7 The modulator proper consists of the voice-frequency input transformer T3, the carrier input transformer T1, the four Westinghouse rectifier units W1, the load resistance R8, the carrier leak potentiometer P1 and the sideband output transformer T2. In addition, a resistance capacity combination R6, C2, R7 is connected across the secondary winding of the voice transformer T3 in order to absorb high frequency products of modulation which may be reflected back into the modulator from the band filters or beyond. The loss in this suppressor at voice frequencies is negligible. The carrier frequency supply to the modulator is obtained from a valve oscillator having a high degree of stability with

/ battery

battery and temperature variation. The modulating action of the carrier frequency by the speech frequencies in this type of modulator is explained in Paper No. 7.

14.8 Modulator Band Filter. The two sidebands produced in the modulator are passed to the modulator band filter, where the upper sideband is suppressed and only the lower sideband is transmitted. Owing to the additional gain in the SOB system, it is necessary that the modulator band filter in the SOB system should have a greater loss to unwanted frequencies than in the case of the SOA system. Therefore, in the SOB system an auxiliary unit is added to the modulator band filter for this purpose. The filters consist of assemblies of dust-cored coils and mica condensers.

14.9 Transmitting Amplifier. The lower sideband delivered from the modulator band filter is passed to the transmitting amplifier, which is a single valve amplifier employing negative feedback. A schematic circuit of this amplifier is given in Fig. 36. At the input to this amplifier there is a pad, the value of which is set at the time of installation to give the desired output level to line. The output winding of T1 is loaded by the resistor R7, and the high potential end passes to the control grid of the valve V1, which is an indirectly-heated pentode, 4328A. The opposite end of the winding goes to the cathode via resistors R3, R1 and R2. R1 and R2 provide the requisite bias for the valve, while R3 determines the degree of negative feedback which is applied via R4 from the anode. The output of the valve is choke-capacity coupled by means of inductance L1 and condenser C4 to the primary winding of the output transformer T2.

14.10 Auxiliary Transmitting Amplifier. In the case of the SOB system, the output of the transmitting amplifier is fed to a similar type amplifier with a single pentode valve VLS.452 or 5A/102A, employing negative feedback, and capable of handling the required output. A preset pad is also provided at the input to this amplifier, which is fixed at the time of installation in a similar manner to that in the transmitting amplifier.

14.11 Transmitting Directional Filter. The output from either the single amplifier in the case of the SOA system or from the two amplifiers in tandem in the case of the SOB system is fed into the transmitting directional filter, the purpose of which is to separate the transmitted sideband from the sideband received from the distant terminal. In the SOB system, the transmitting directional filter at the B terminal has an auxiliary unit added, giving it a greater attenuation in the blocking range. The transmitted sideband then passes through the high pass line filter and so to line.

Compensating Network. This unit is connected across the line side of the directional filters to make the terminal impedance

/ equal

equal to that of the line over the frequency ranges corresponding to the two directions of transmission.

14.12 Received Speech. Sideband currents received from the line pass through the high pass line filter to the receiving directional filter. In the SOB system the receiving directional filter at the A terminal has an auxiliary unit added giving it a greater attenuation in the blocking range. The carrier sideband then passes to the demodulator.

Demodulator. The demodulator is similar to the modulator. It differs from the modulator in that no potentiometer is provided for refinement of the carrier balance (P1 of modulator), the equalising network is connected across the secondary of the output transformer instead of the primary of the input transformer, and a low pass filter is connected across the V.F. output from the demodulator. This filter has a cut-off of 3.1 Kc. per sec. It prevents the passage of carrier leak and products of demodulation, other than the reproduced voice frequencies, into the voice-frequency circuit.

Auxiliary Low Pass Filter. The output from the demodulator is passed through this filter which, in conjunction with the filter included in the demodulator circuit, prevents the unwanted products of demodulation from entering the receiving amplifier.

14.13 Receiving Amplifier. This amplifier is necessary as the speech frequencies leave the demodulator at a very low level. The receiving amplifier supplies the gain to restore the speech frequencies to the level necessary for the switchboard. A schematic circuit is given in Fig. 37. It is a single stage amplifier with negative feed-back and circuit equalisation. The gain is set at a basic figure by the preset input pad A. A further pad of 6 db. (R4) may be connected in or out of the circuit by changing the position of a U link. The tappings of the secondary of the input transformer are connected to U link sockets arranged around a centre socket. A U link is connected from the centre socket to the tapping giving the required overall equivalent for the channel. This in conjunction with the 6 db. U link provides for day to day adjustment of gain. The amount of feedback and hence in this case the degree of equalisation is controlled by the inductance L2. The working tapping for this inductance is chosen at the time of installation of the system. Increasing this inductance will reduce the gain at low frequencies and so compensate for the uneven attenuation of the line. Grid bias for the valve is derived from the voltage drop across the resistance R2 and the shunt condenser C2 in the cathode lead. The output from the receiving amplifier is passed via the monitoring coil panel to the 4-wire terminating unit (hybrid) and thence to the switchboard.

/ 14.14

14.14 Modulator and Demodulator Oscillator. A schematic diagram is given in Fig. 38. Oscillations generated in the oscillator valve V1 are transmitted to the tapped transformer T3 in the anode lead. A large proportion of the oscillator output is dissipated in the resistors R5, R7 and R9 across the anode winding of the transformers. The feed back to the grid circuit of the valve is through the resistance R3. The condenser C7 blocks the path for D.C. currents from the plate battery. Winding 1-3 of the transformer T1 is tuned by condensers C1, C3, C3A and C5 to the carrier frequency to be generated and the oscillations of this frequency are applied to the grid circuit of the valve through the transformer T1. The condenser C1 is fixed and constitutes the main tuning capacity. C3 gives the approximate frequency required, and the final adjustment is made with the variable air condenser C5. This air condenser is provided with a locking device so that it cannot be accidentally altered when once set. The grid bias for the valve is obtained from the grid current across the leak R1 in conjunction with the grid condenser C9. The output may be varied by means of tappings on the output winding of the transformer T3.

14.15 For purposes of ringing a relay contact connects extra capacity in the tuning circuit of the modulator oscillator which decreases the oscillator frequency by 1000 p.s. This extra capacity is connected across the winding 2-3 of the transformer T1. The demodulator oscillator is similar in design except that the frequency changing condensers necessary for outgoing ringing are not required.

15. THE RINGING CIRCUIT AND TESTING FACILITIES.

15.1 General. The ringing equipment consists of two panels, a signalling receiver panel which amplifies and detects incoming ringing current, and a relay panel which mounts all the relays associated with the ringing equipment. Fig. 39 shows the general arrangement of the ringer circuit. In the normal working condition with no incoming or outgoing ringing, only relay D is held operated, relay B being energised over one winding only.

15.2 Outgoing Ringing. 17 cycles per second current from the switchboard energises relay F over contacts R1-3 and R1-4. The operation of F1 contact energises relays CO and RO. If D.C. signalling is used for outgoing ringing, the application of an earth to terminal C13 designated "SWBD, D.C. RING" will have the same effect. Contacts CO-1 and CO-2 open circuits both the transmitting and receiving sides of the 4-wire terminating circuit, to prevent the passage of 17 cycles per sec. current to the modulator. Relay RO performs four functions:-

15.21 Contacts RO-1 unbalance the modulator circuit allowing the normally suppressed carrier to be transmitted. / 15.22

15.22 Contacts RO-2 close the circuit supplying 17 c.p.s. current to relay I which vibrates at 17 c.p.s. RO-5 connects earth to the start wire of the 17 c.p.s. ringer if this facility is required.

15.23 Contacts RO-3 connect the vibrating contacts of Relay I across the output of the modulator; thus the transmitted carrier is interrupted at 17 c.p.s. The resistances R3 and R4 in parallel with contact I1 are regulated to give the desired output ringing level.

15.24 Contacts RO-4 connect an additional capacity into the tuned circuit of the modulator oscillator lowering the carrier frequency of 1,000 c.p.s. This change, in effect, moves the carrier frequency to a point within the normally transmitted sideband, 1,000 c.p.s. away from the nominal carrier frequency of the channel.

15.3 Thus, in outgoing ringing, i.e., when 17 c.p.s. is sent into the system from the switchboard, relays F, CO, RO and I are operated. The operation of these relays causes a specified level of carrier current (reduced in frequency by 1,000 c.p.s. and interrupted at 17 c.p.s.) to be transmitted to the distant terminal. In effect, this corresponds exactly to the application at the switchboard of a 1,000 c.p.s. tone interrupted at 17 c.p.s., and is consequently demodulated as such at the receiving terminal.

15.4 Incoming Ringing. At the distant terminal, this current is demodulated to produce a 1,000 cycle per second tone interrupted at 17 cycles per second. At the receiving end, the signal, after amplification in the receiving amplifier, passes to the Signalling Receiver and also through the normal connection of the 4 wire terminating unit to the switchboard. As a result of the operation of the ringing circuit, the 4 wire terminating connection is disconnected and thereafter the received signal is wholly controlled by the Signalling circuit, which converts the received signal to 17 c.p.s. and applies it direct to the switchboard. The signalling receiver circuit is given in Fig. 40. The strength of the demodulated incoming signal of 1,000 c.p.s. tone interrupted at the rate of 17 c.p.s. is adjusted by means of a preset potentiometer P1. The 6 db. pad on the input is normally plugged out but is used for testing purposes. When the applied signal peak voltage on the valve exceeds the D.C. bias, due to the voltage drop across the grid bias resistance R2, grid current will flow and the grid-cathode impedance will fall.

R5 prevents this low impedance from having any adverse effect on the input impedance of the panel. When grid current commences to flow, a potential will appear across R1 and, since grid current only flows during part of the positive half-cycle of the input wave, this potential will be in the form of impulses. These impulses will charge up the condenser C1 to a steady D.C. voltage which will be added in series with the normal bias voltage. The effect of this will be - / (a)

(a) To reduce the gain of the amplifier by moving the working point further up the plate current/grid volts curve, and

(b) To minimise the harmonic distortion due to grid circuit rectification of the input wave.

The output from the valve is choke-capacity coupled by means of L1 and C3 to the primary winding of the output transformer T1. The secondary winding of T1 is connected to three tuned circuits, tuned to frequencies of 1000, 600 and 750 c.p.sec. respectively, each connected to a separate dry plate rectifier. The first circuit L_4 C_4 is sharply tuned to 1000 cycles per sec. and operates from the incoming signalling current. L_3 C_5 and L_2 C_5 act as guard circuits to prevent operation of the ringer during conversation on the channel. The output from the 1000 c.p.s. circuit operates a relay train which applies the 17 c.p.s. supply to the exchange line; the outputs from the two remaining rectifiers are combined and applied to a further relay train which operates to disable the 1000 c.p.s. relay train.

15.5 The conditions for operation of the 1000 c.p.sec. relay train are:-

15.51 That the input power to the panel shall consist largely of 1000 c.p.sec. current. The output from the amplifier is just sufficient to operate the 1000 cycles per sec. relay by an adequate margin; thus, if the proportion of 1000 c.p.sec. current to current of other frequencies is unfavourable, the relay will fail to operate.

15.52 That the interrupted signal shall be maintained for more than 200 milliseconds. A slow release relay is included in the 1000 cycles per sec. relay train for this purpose.

15.53 That certain frequencies commonly present in speech shall not be present, that is the disabling circuit is very sensitive to 600 and 750 c.p.sec. by reason of its tuned circuits.

15.6 Referring again to Fig. 39, the rectified 1000/17 c.p.s. current operates relay A through the contacts of the guard relay C. Contact A1 opens the normally operated relay D and D1 falling back operates relays C0 and R1. Relay C0 open-circuits both the transmitting and receiving sides of the 4-wire terminating set. Relay R1, connects 17 cycles per sec. current from the local supply to the switchboard to operate the normal calling equipment. Contacts R1.1 connect earth to the start wire of the 17 c.p.s. ringer if this facility is required.

The guard relay B is maintained at the required high sensitivity by the provision of an additional coil carrying an aiding bias current

/ supplied

supplied from the 24 volt relay battery via contacts C1 and C2 and the potentiometer P1, which is adjusted to secure correct operation. When inputs of sufficient energy pass through the tuned guard circuits at 600 c/s and 750 c/s, relay B operates and causes operation of relay C. Relay C, in turn, breaks the circuit to relay A via contacts C3 and, at the same time, relay B connects an earth via contacts B1 to relay D and prevents its release. Thus, the effect of any speech current at signalling frequency is nullified before false signalling can be produced, and B chatters slowly so long as 600 c/s or 750 c/s components are present at any appreciable level.

15.7 Testing Facilities. Meters are provided in the equipment for reading supply voltages, plate voltages, anode and cathode current etc. A resistance is incorporated in each anode circuit of such value that, with normal anode current flowing, a drop of 0.5 volt occurs across the resistance. The meter for checking the anode currents is an 0-1 volt range voltmeter calibrated as an anode current indicator. The centre of the scale is marked with a red line indicating normal current - to the left is marked 20 per cent. and 50 per cent. low, and to the right is marked 20 per cent. and 50 per cent. high. A typical connection for this purpose is shown at PV1 in Fig. 40.

15.8 Transmission Measuring Set. Transmission tests on the terminal are carried out by means of the 74108A Transmission Measuring Set provided as part of the equipment. This set includes two distinct circuits, an 800 c/s oscillator and its associated pads, and a rectifier loss and level meter with attenuation pads.
The sending unit can send a fixed level of 1 mW or -4 db. (reference to 1 mW) from the 800 c/s oscillator. The measuring unit is of high impedance when switched for measuring levels, or it may be switched to present a 600 ohm termination to the circuit being measured. Losses and levels from -15 db. to +20 db. (reference to 1 mW into 600 ohms) may be measured.
The general method of testing is to send a fixed level at a suitable point in the transmission path of the carrier channel and to measure the level at successive points in the transmission path by bridging the high impedance Transmission Measuring Set Receiving Unit across these points. The circuit of the set is given in Fig. 41.

15.9 The T.M.S. Sending Circuit consists of a single valve oscillator followed by attenuation pads and a three position key. The anode of the multi-electrode 4328A valve is coupled to the control grid through two windings, connected series aiding, of a three winding transformer T, and through the condenser gridleak combination C2 and R1. The two windings providing the feedback are tuned by the condenser C1 to a frequency of 800 cycles per second $\pm$ 2 per cent. The anode supply passes through the mid-point of these two windings from which an alternating current

/ path

path to the cathode is provided by the condensers C3 and C5, the latter by passing the grid bias resistances inserted between the cathode and suppressor grid terminals. The grid bias resistance is made up of the continuously variable potentiometer P1, used to adjust the oscillator output to its standard value, and three resistances making up R2, the total value of which can be adjusted internally by strapping to allow for differences between valves and bring all the possible variations in output due to their differences within the range adjustable by P1 (± 1 db) with further allowance for the permissible variation of anode voltage. A step-down is provided from the oscillating circuit to the output winding of T1 on to an attenuation pad N1 from which the oscillator, when its output is calibrated, sends zero level (1 mW into 600 ohms).

15.10 The key K2 controls the connection to -

(a) "1 mW"
(b) "TEST LEVEL" introducing a pad with either 3 or 4 db. loss. The choice of 3 or 4 is made on installation.
(c) "CAL". In this position the output of N1 is connected directly to the receive side, and the "RECEIVE" sockets are disconnected from the receive side. A 600 ohm termination is also connected across the receive side.

15.11 The Receiving Circuit. This is a simple level measuring set consisting of a direct reading rectifier meter, having shaped poles to give a more even scale, and graduated in steps of 0.5 db. from 0 to -10 db. and in steps of 1 db from -10 to -15 db. Between this meter and the "RECEIVE" sockets is a variable pad controlled by the "RANGE" switch which introduces losses in steps equivalent to 5 db. This extends the range of measurments to +20 db. When the key K2 is thrown to the "CAL" position, measurements cannot be made on external circuits but with K2 in either the "1 mW" or the "TEST LEVEL" position, the attenuation pad is connected to the "RECEIVE" terminals. The key K1 designated "LOSS LEVEL" enables a 600 ohm resistance to be bridged across the "RECEIVE" terminals when it is in the "LOSS" position. This is provided in case it is desired to terminate a 600 ohm line with the set.

15.12 The Calibration Circuit. This circuit provides a means of checking the output of the oscillator by simply throwing key K2 to the "CAL" position. In this position the output of N1 is switched across the input to the "RANGE" switch and the "SEND" and "RECEIVE" sockets are cut off from the rest of the circuit. This enables the "1 mW" output to be measured directly and corrected by means of the output control P1.

Testing Points. At the input and output of the various panels, testing points are provided in the form of U-links and sockets. In the normal condition of the circuit, the U-link is inserted in

/ the

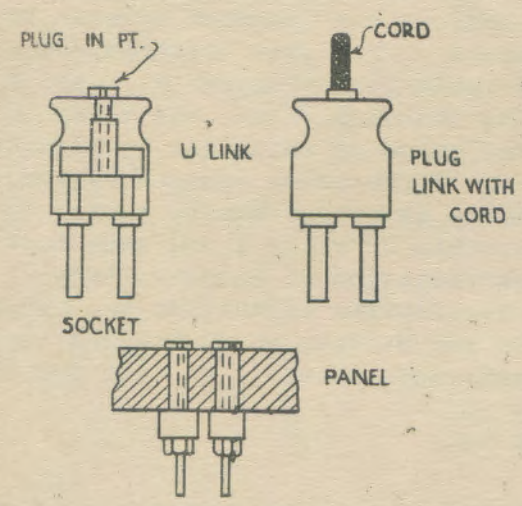

the socket. For breaking the connection or for point-to-point testing, the U-links are removed. Level measurements across a pair of U-links are made without removing them by means of sockets contained on the U-links. A diagram of a U link is given.

15.13 Alarms. The usual power failure alarms are provided. In the HT + lead of each valve circuit there is a relay which is held operated by the current flowing through it. If for any reason the anode current failed, the release of the relay operates an alarm buzzer calling attention to the failure.

Mains Unit. When the terminal is to operate from the A.C. mains a unit is provided which gives the following:-

(a) A rectifier with well smoothed 150 V. output for the H.T. supply.
(b) A rectifier with partially smoothed 24 V. output for relay operation.
(c) An A.C. 24 V. output for the valve heaters.

Selenium dry plate rectifiers are used in the bridge connection. There is an alarm fuse in each of the supply circuits which, on operation, causes lamps to light. No bell connection is provided here but H.T. or heater supply failures will result in the operation of anode-current-fail alarms in the system, while the failure of the relay supply will cause a no volt alarm to operate in the relay panel of the system.

16. TEST QUESTIONS.

1. (a) List the filters incorporated in a type SOA system.
   (b) State briefly the purpose of each.
   What is the difference between the SOA and SOB system?

2. Assuming a V.F. band of 300 - 2700 c.p.s. tabulate the transmitted frequencies for each of the systems described in this paper.

3. Compare briefly the methods of signalling in the CF, D and F, SA and SOA type systems.

4. Compare the different methods of making day to day adjustments to meet variations in line attenuation in the following systems - CF, D, F, SA and SOA.

5. A single channel carrier system operates between stations A and C with a repeater at B. It is found that speech can be transmitted over the physical circuit but is not possible in the A to B direction over the carrier channel. Draw a block schematic of the system and list the component parts which might be faulty.

END OF PAPER.

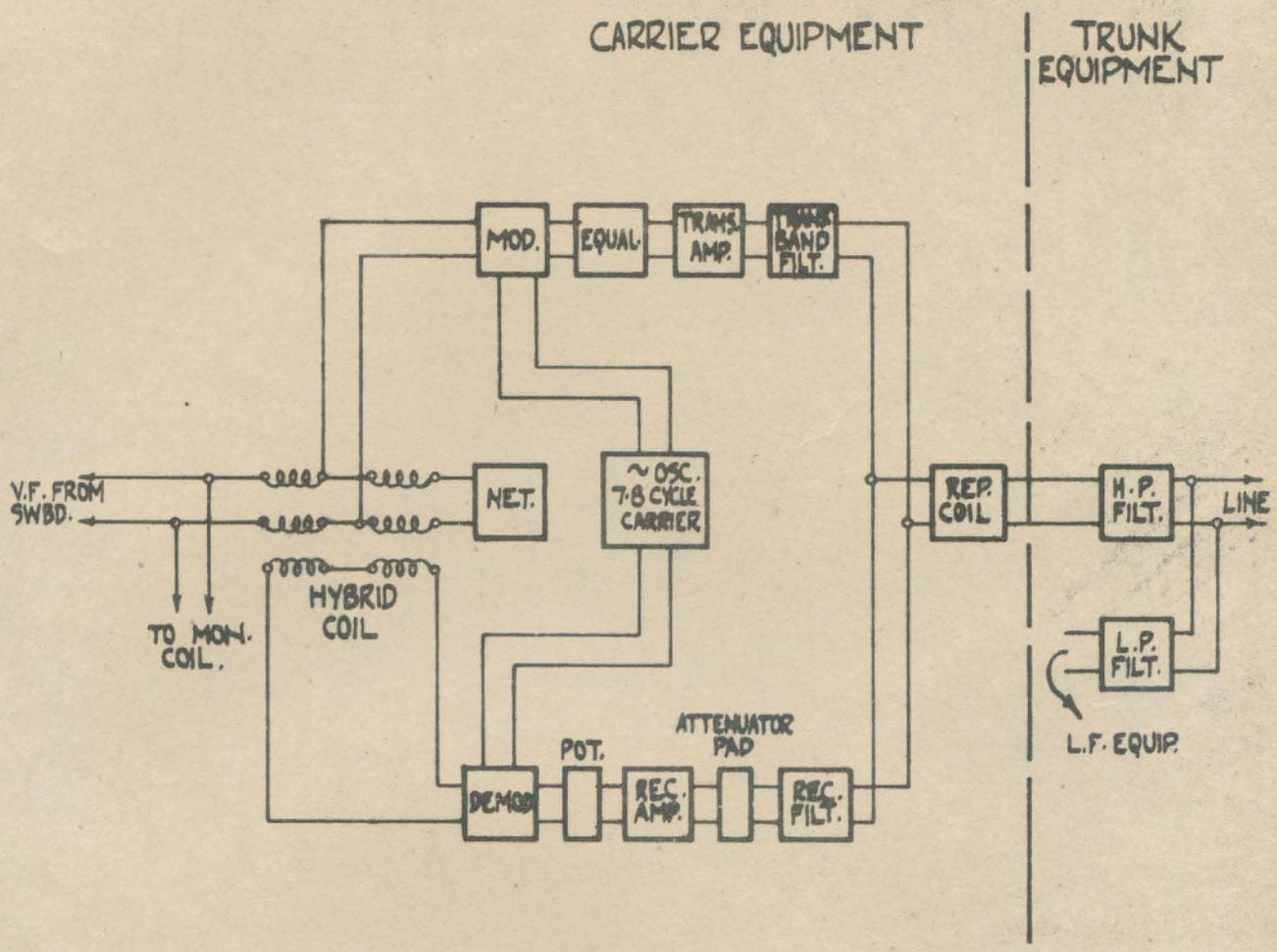

FIG. 1.

BLOCK SCHEMATIC OF C.F.1 CARRIER SYSTEM

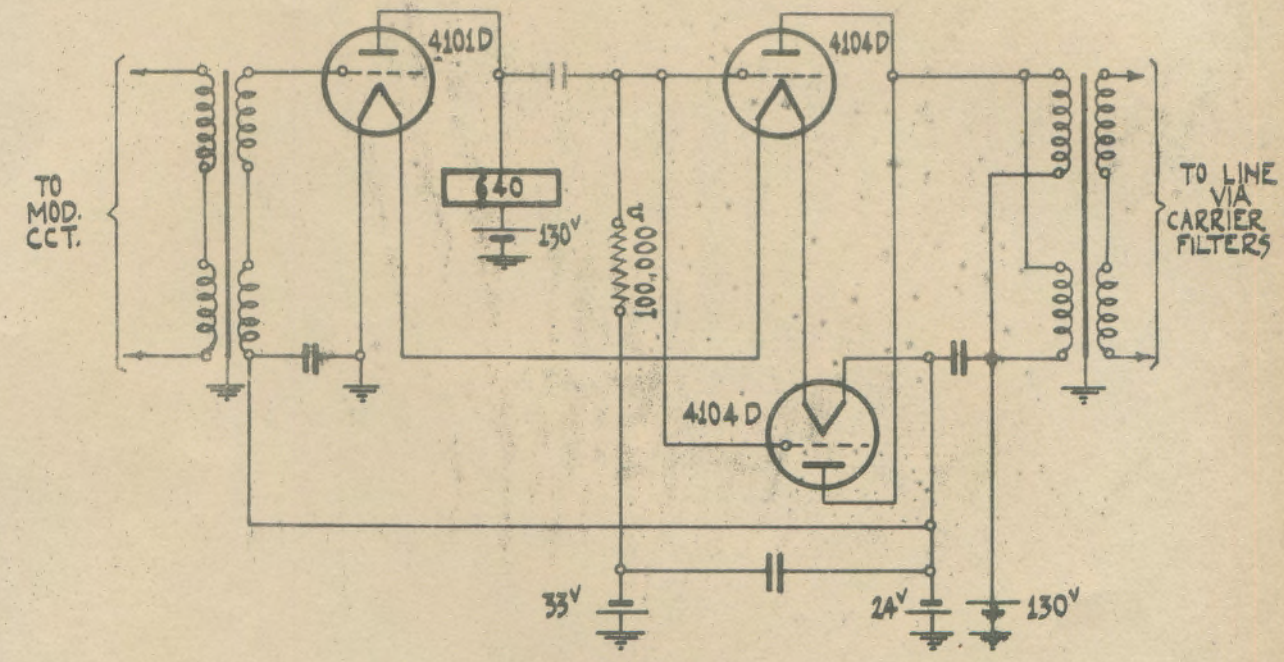

FIG. 2

THE TRANSMITTING AMPLIFIER

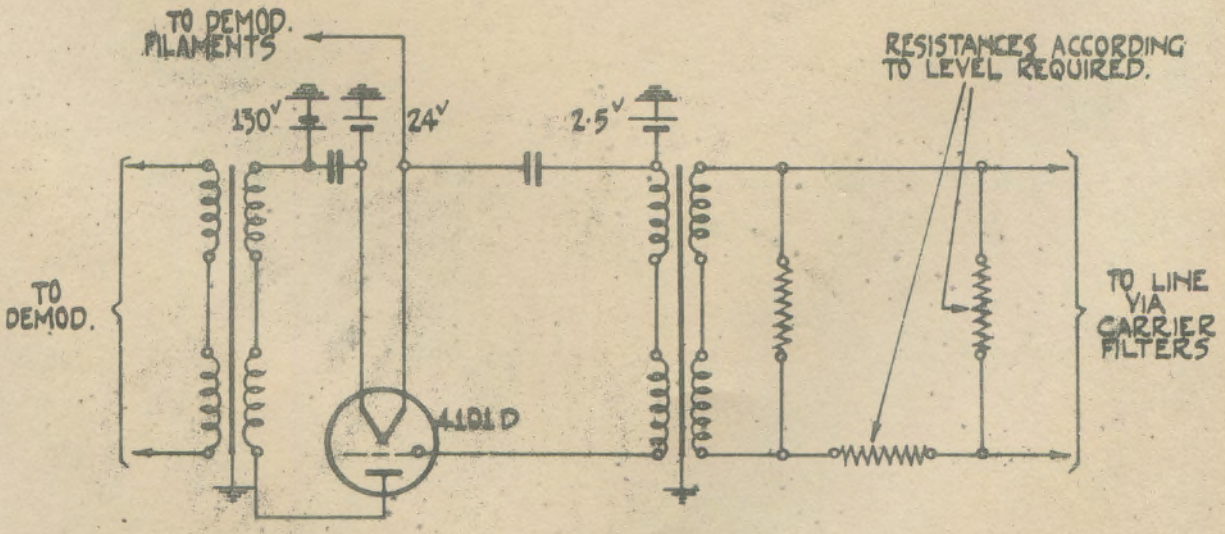

FIG. 3

THE RECEIVING AMPLIFIER

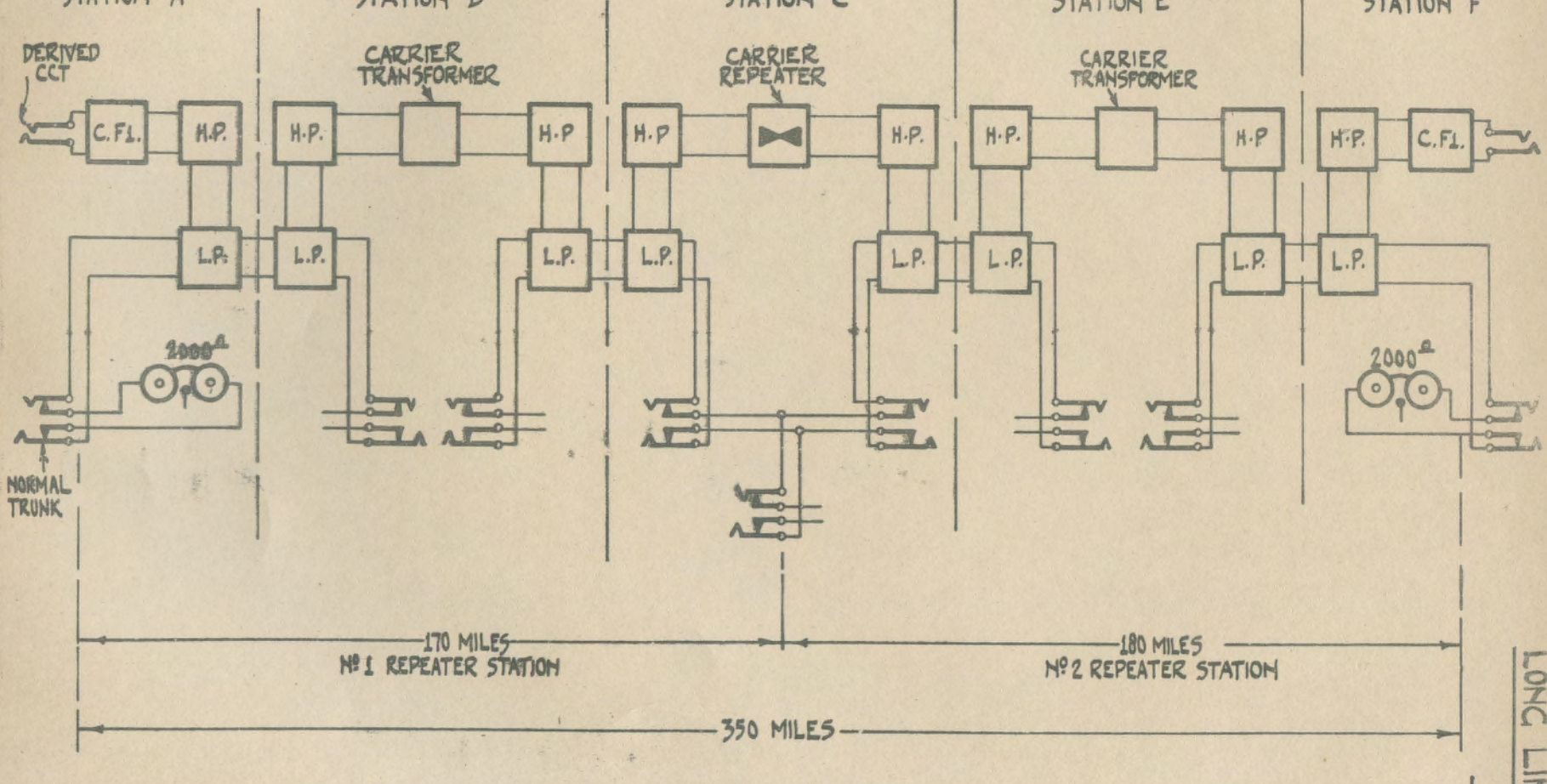

FIG. 4.

DIAGRAM SHOWING METHOD OF SUPERIMPOSING CARRIER ON TRUNK LINES

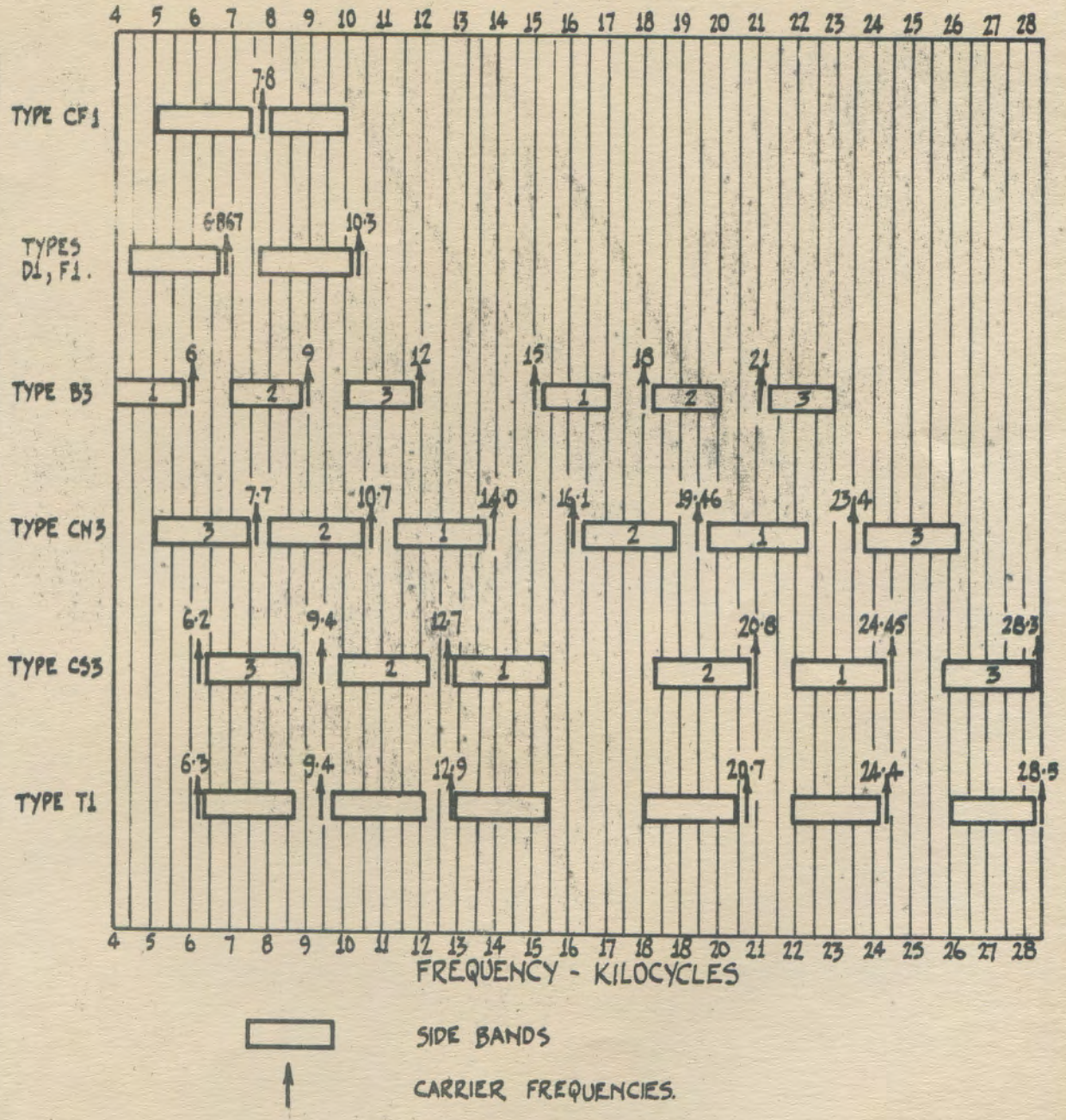

FIG. 5

FREQUENCY ALLOCATION OF CARRIER SYSTEMS

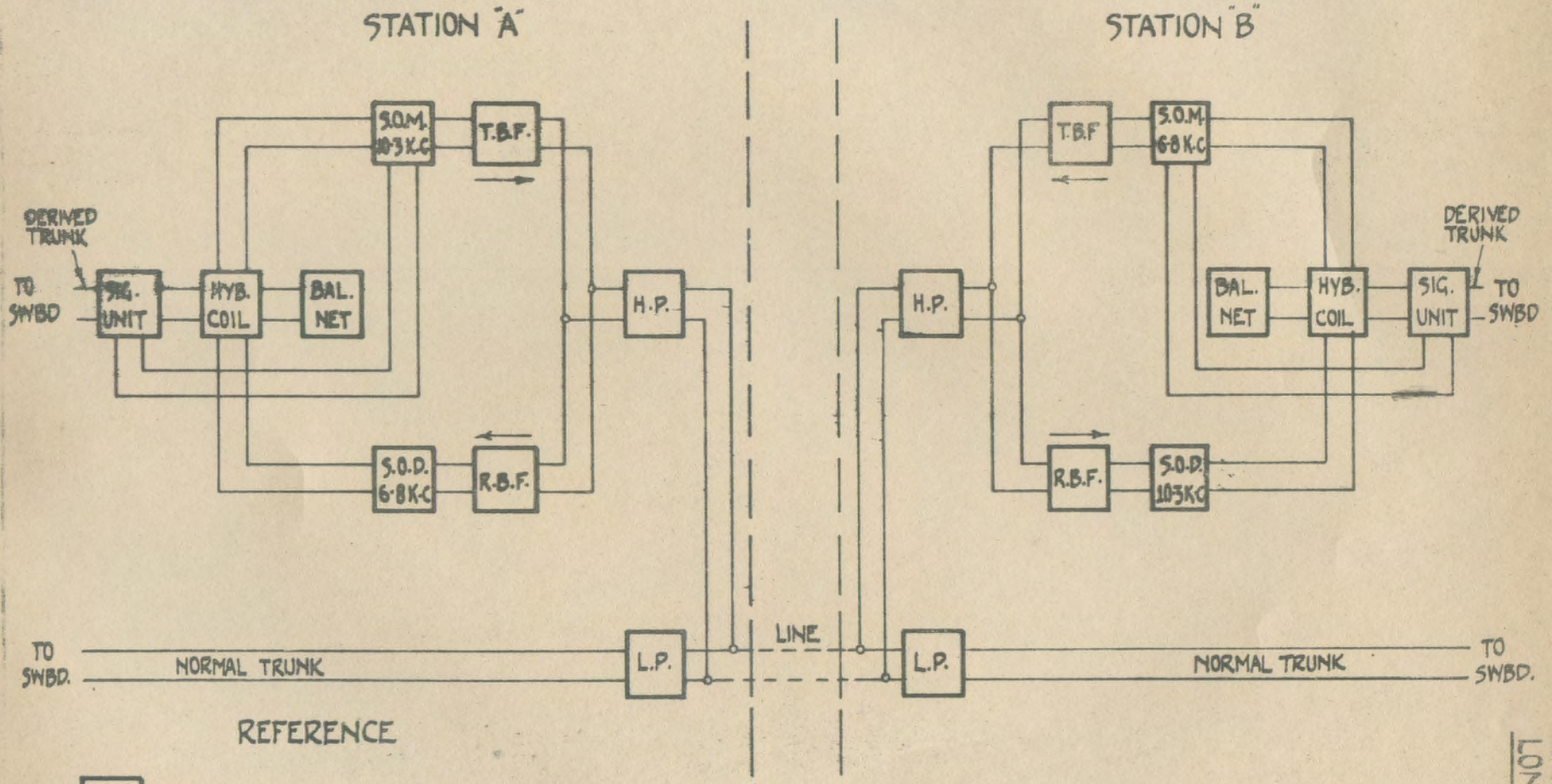

REFERENCE

T.B.F.	TRANS. BAND FILTER
R.B.F	REC. BAND FILTER
S.O.M	SELF. OSC. MOD.
S.O.D.	SELF. OSC. DEMOD.

FIG. 6.

BLOCK SCHEMATIC OF TYPE "D" CARRIER

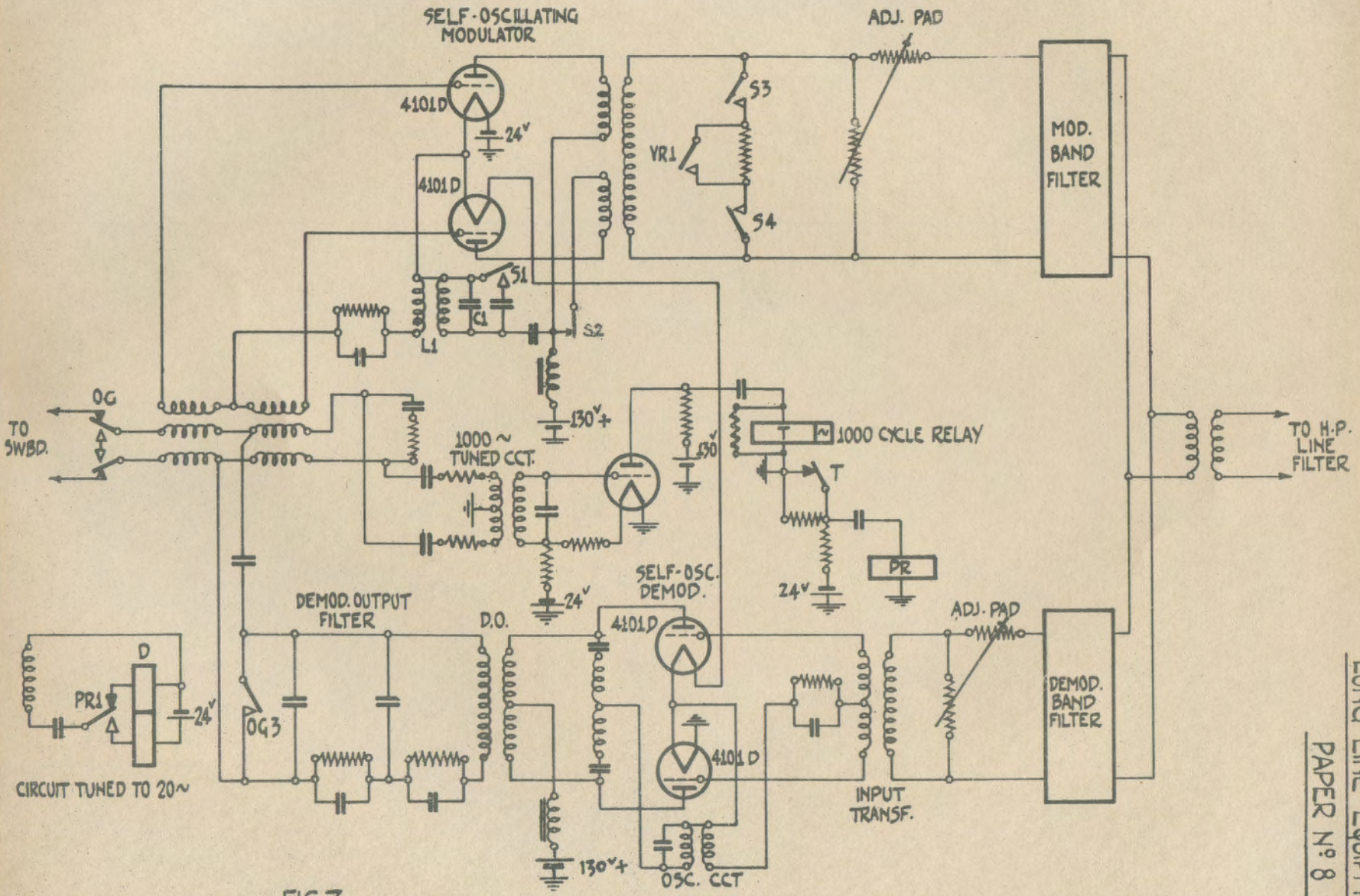

FIG.7.

SCHEMATIC CIRCUIT OF TYPE "D" CARRIER

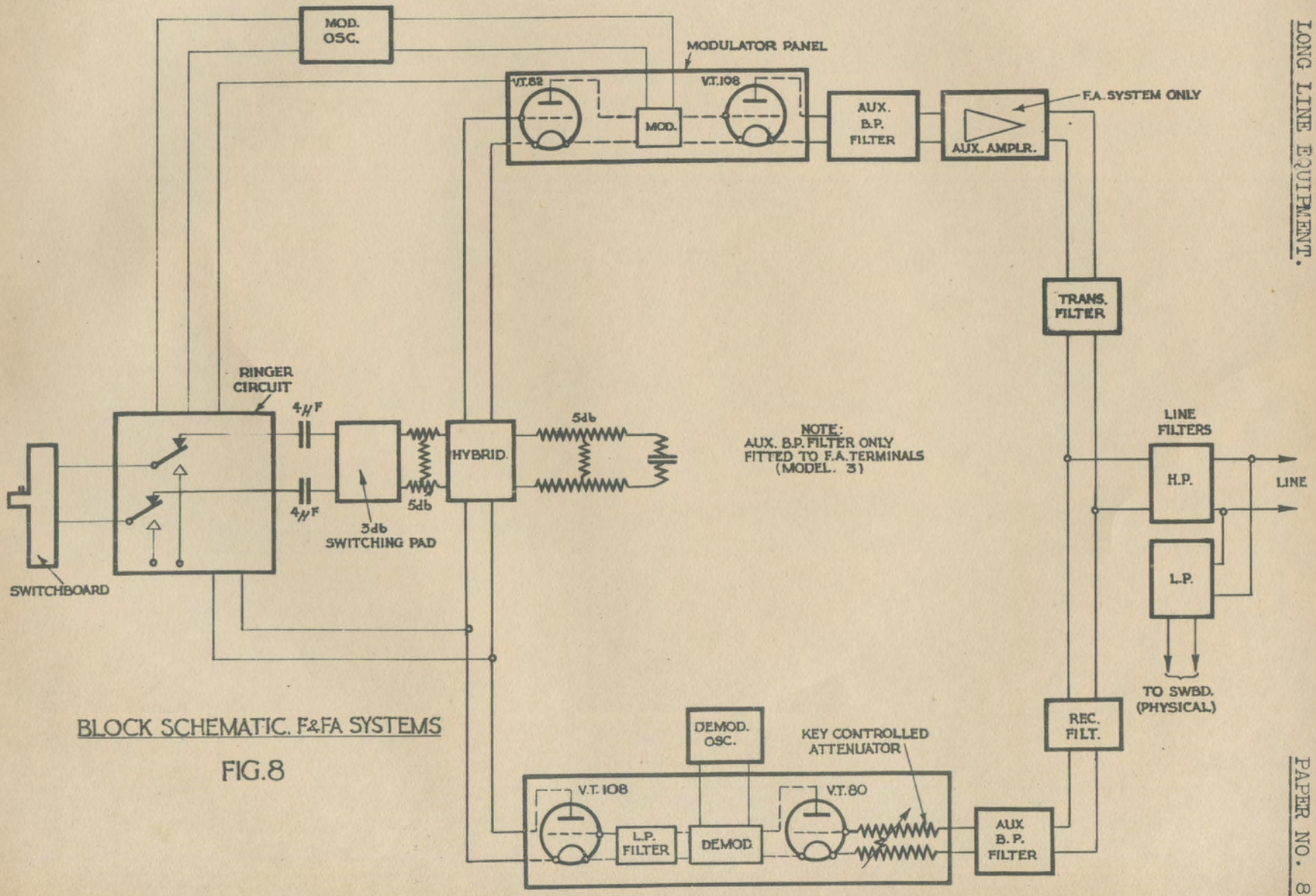

BLOCK SCHEMATIC. F&FA SYSTEMS

FIG.8

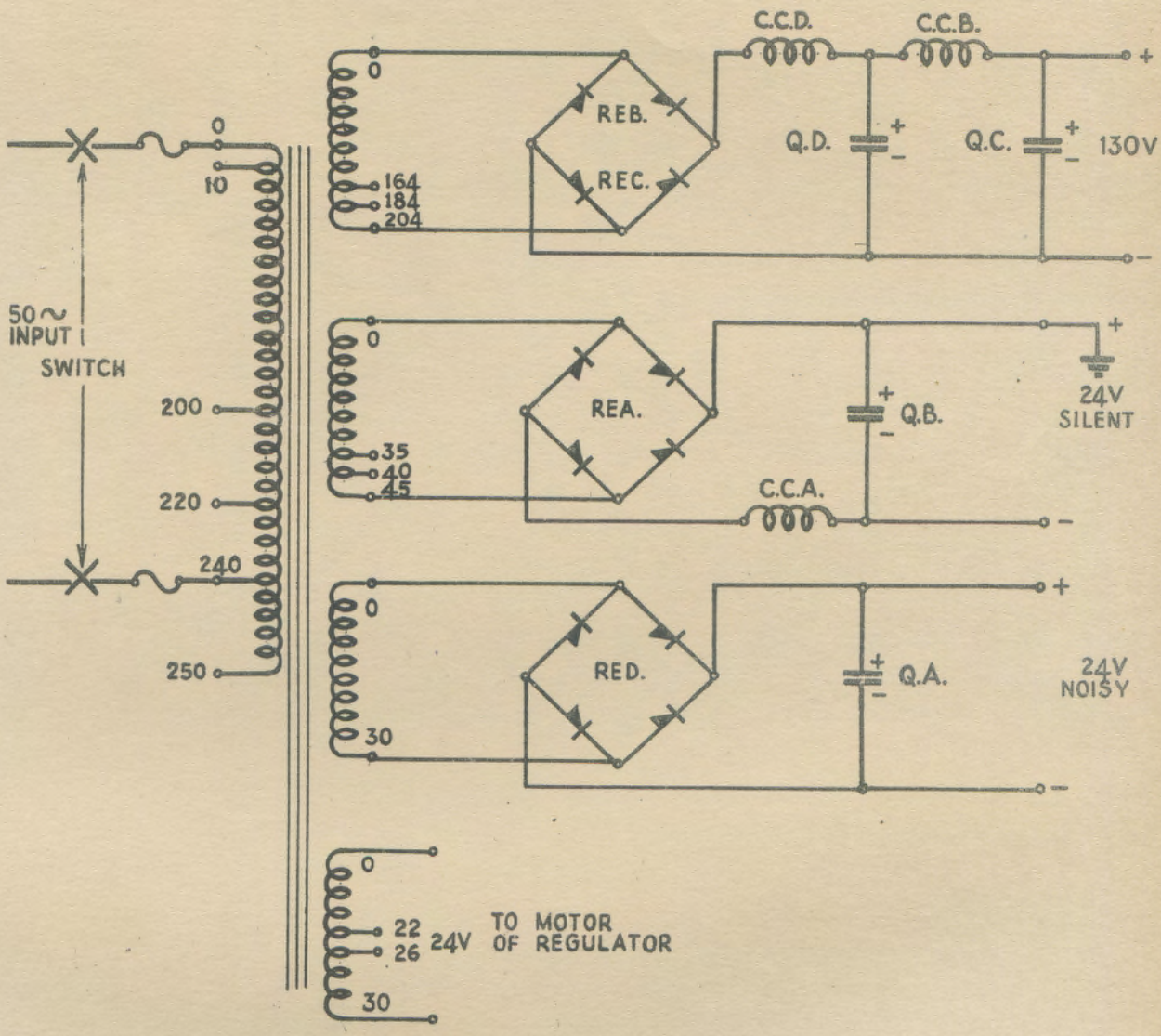

G.E.C. TYPE F. AND F.A. CARRIER SYSTEMS ISSUE 3.

MODEL MAINS UNIT.

FIG. 9.

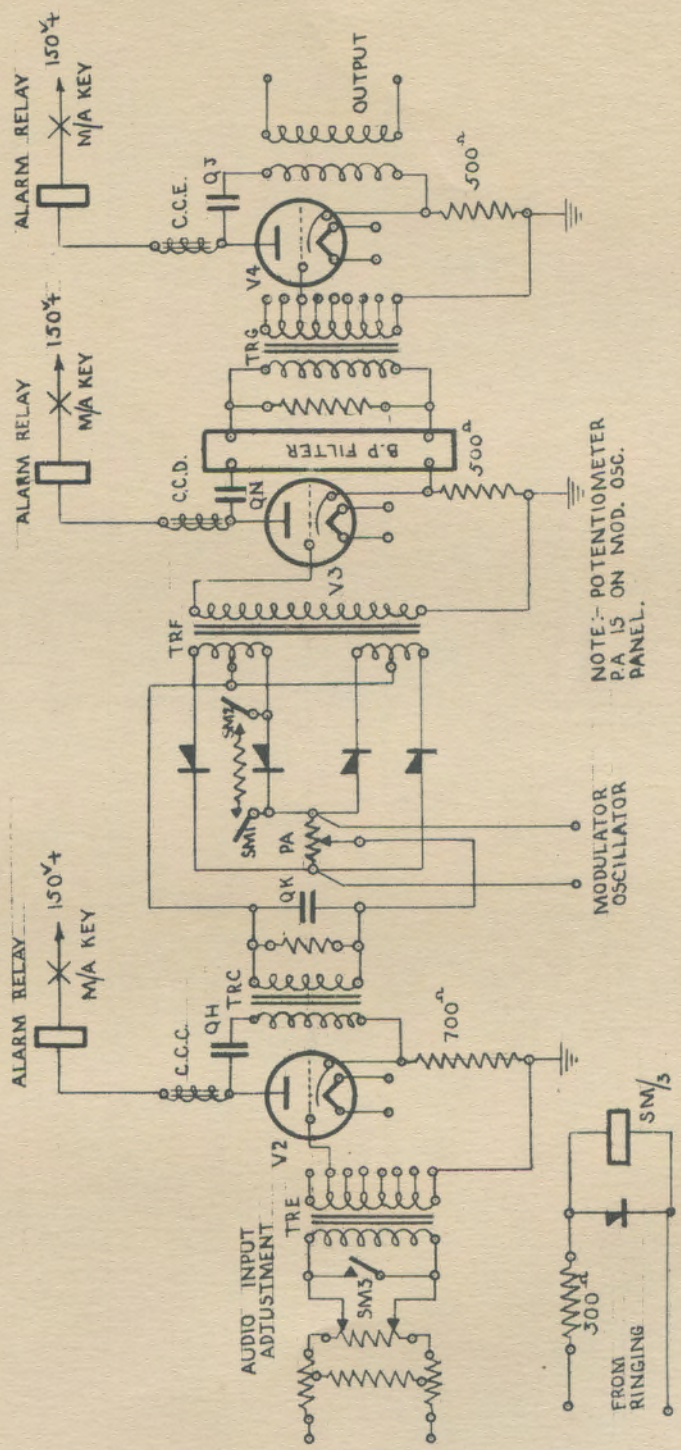

FIG.10.

TYPES F AND FA SYSTEMS
155UE 1 A.C. MODELS.

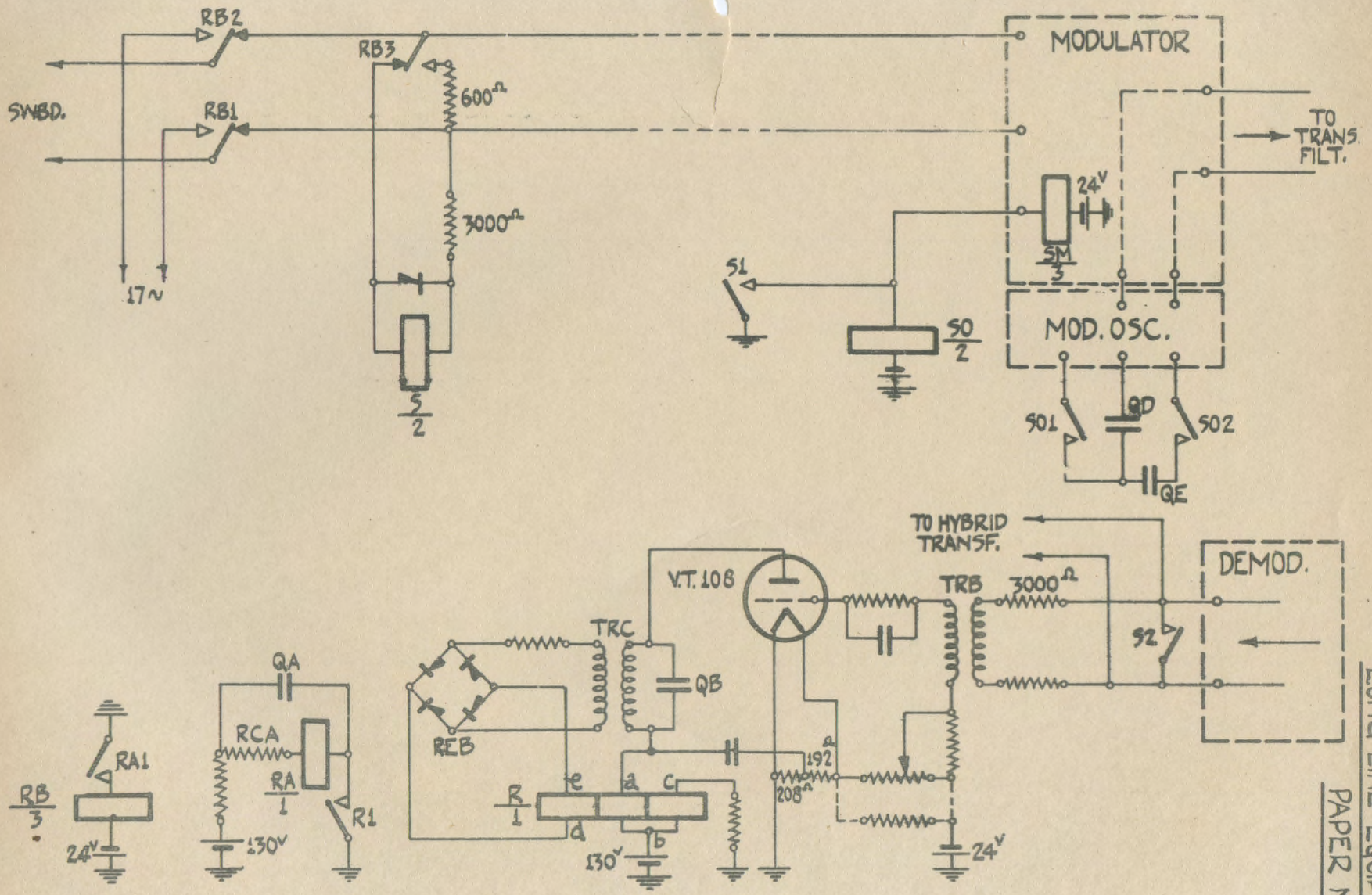

FIG.11

G.E.C. TYPE F & FA SINGLE CHANNEL SYSTEMS - RINGER CIRCUIT

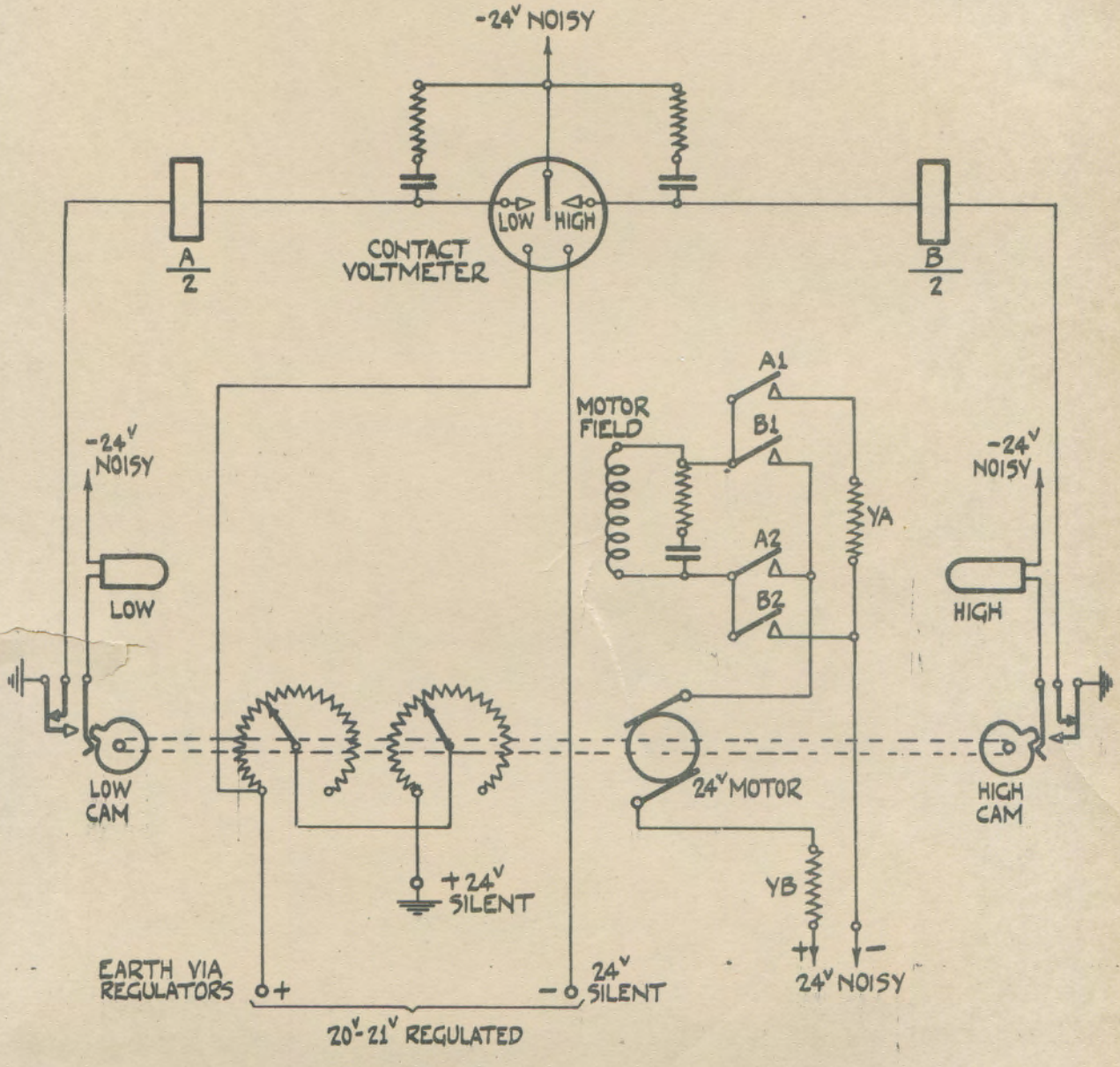

FIG.12.

CIRCUIT OF VOLTAGE REGULATOR PANEL

G.E.C. TYPE F & FA SINGLE CHANNEL SYSTEMS

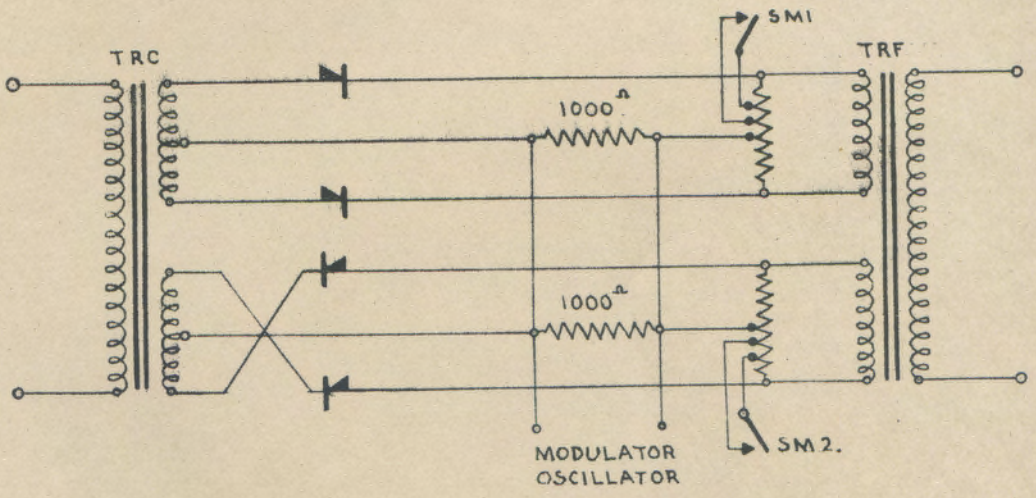

FIG. 13.

MODULATOR FOR THE ISSUE 2 MODEL IS THE SAME AS IN FIG 10 EXCEPT THAT THIS CIRCUIT REPLACES THE MODULATOR PROPER.

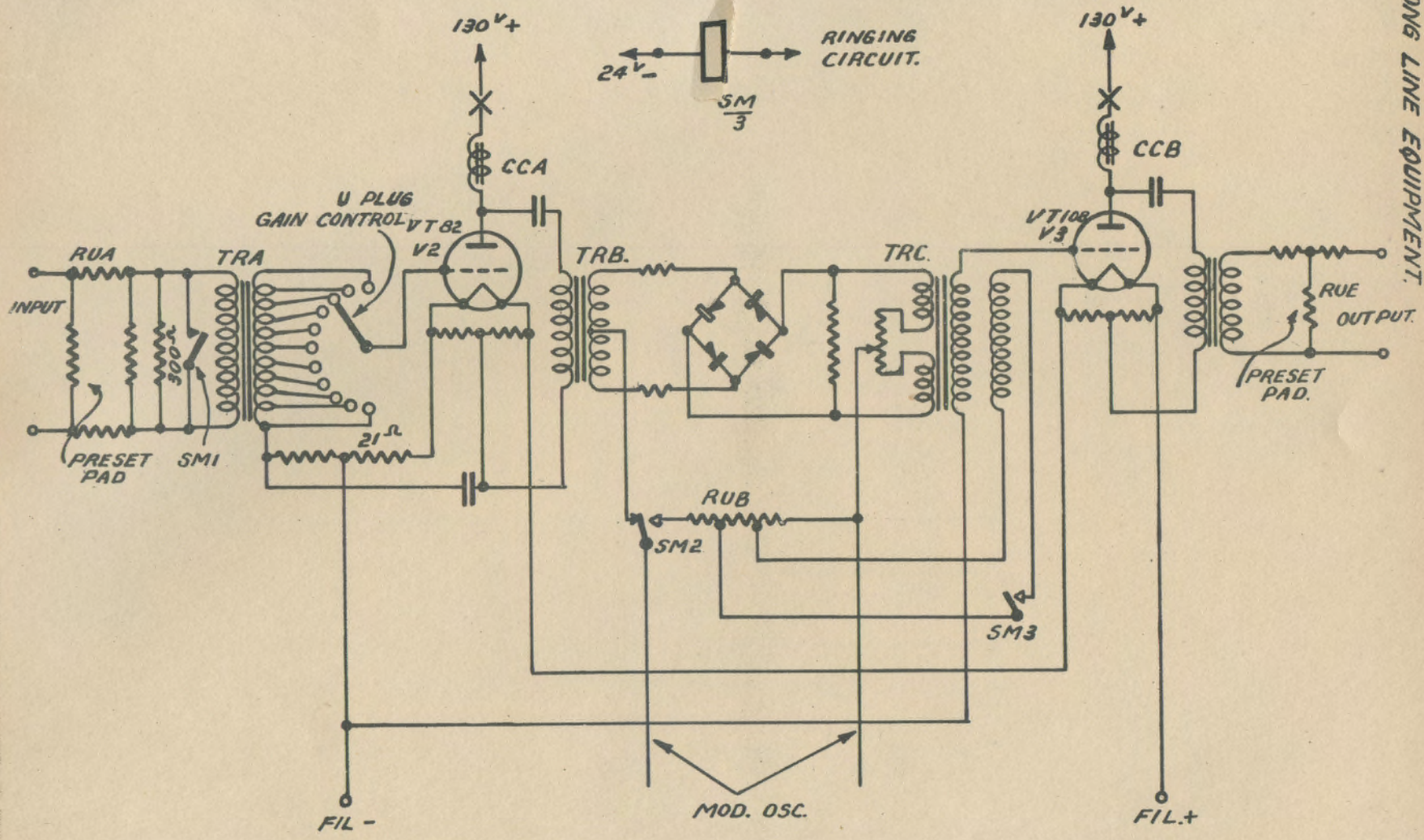

FIG. 14.
F AND FA. SYSTEMS.
MODULATOR
ISSUE 3 MODEL.

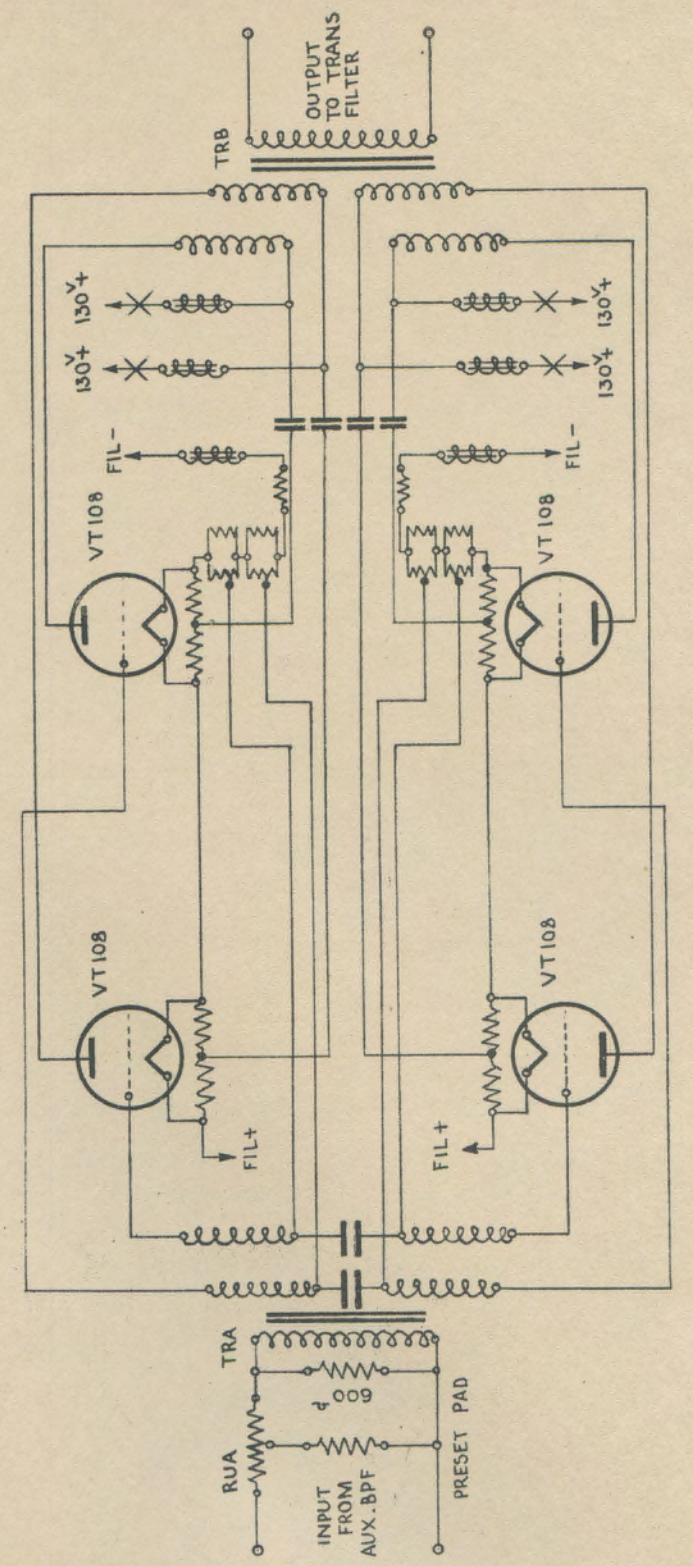

FIG. 16
F. AND FA. SYSTEM
AUXILIARY AMPLIFIER ISSUE 3 MODEL

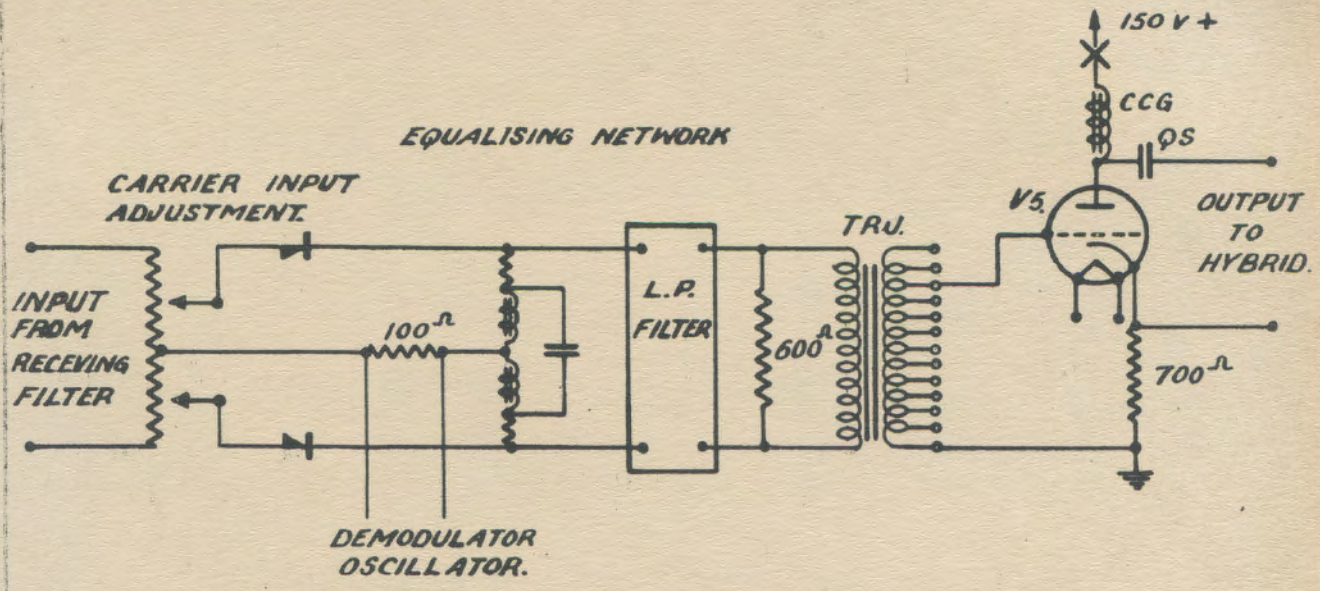

ISSUE 1 MODEL.

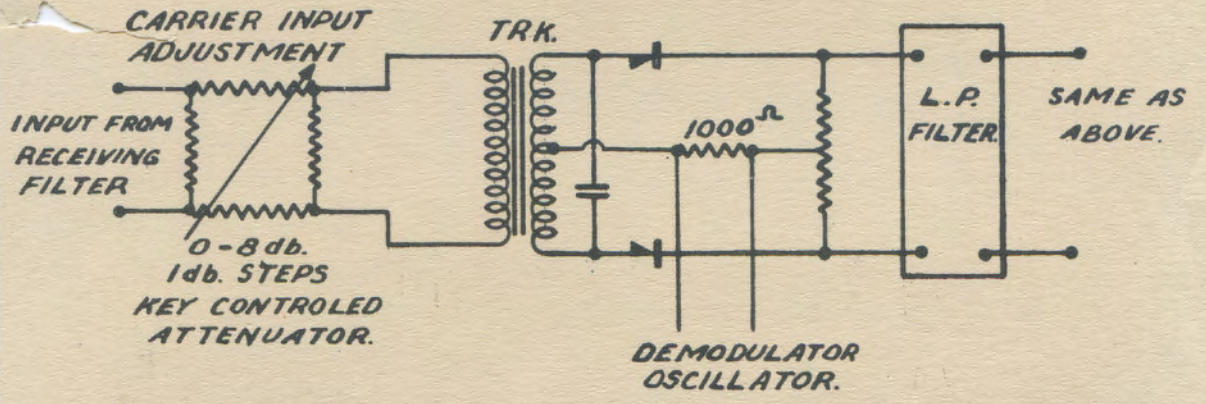

ISSUE 2 MODEL

FIG. 17.
TYPE F AND FA SYSTEMS.
DEMODULATOR A.C. OPERATION.

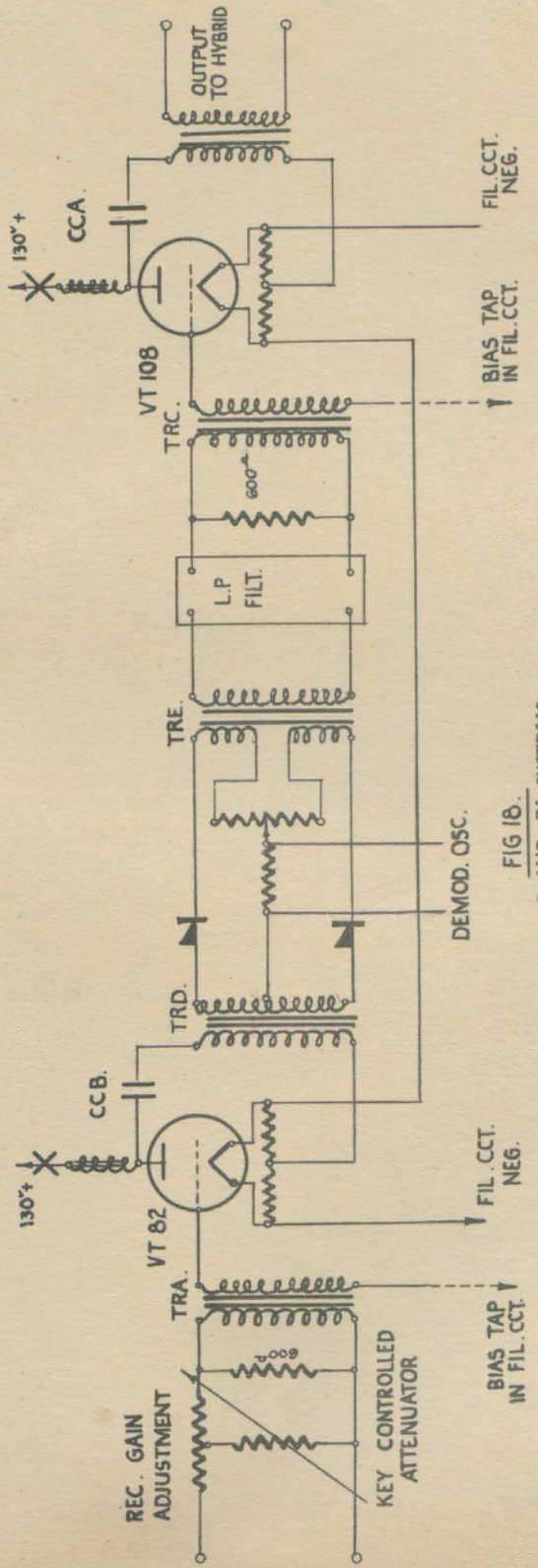

FIG 18.
F AND FA SYSTEMS
DEMODULATOR ISSUE 3 MODEL.

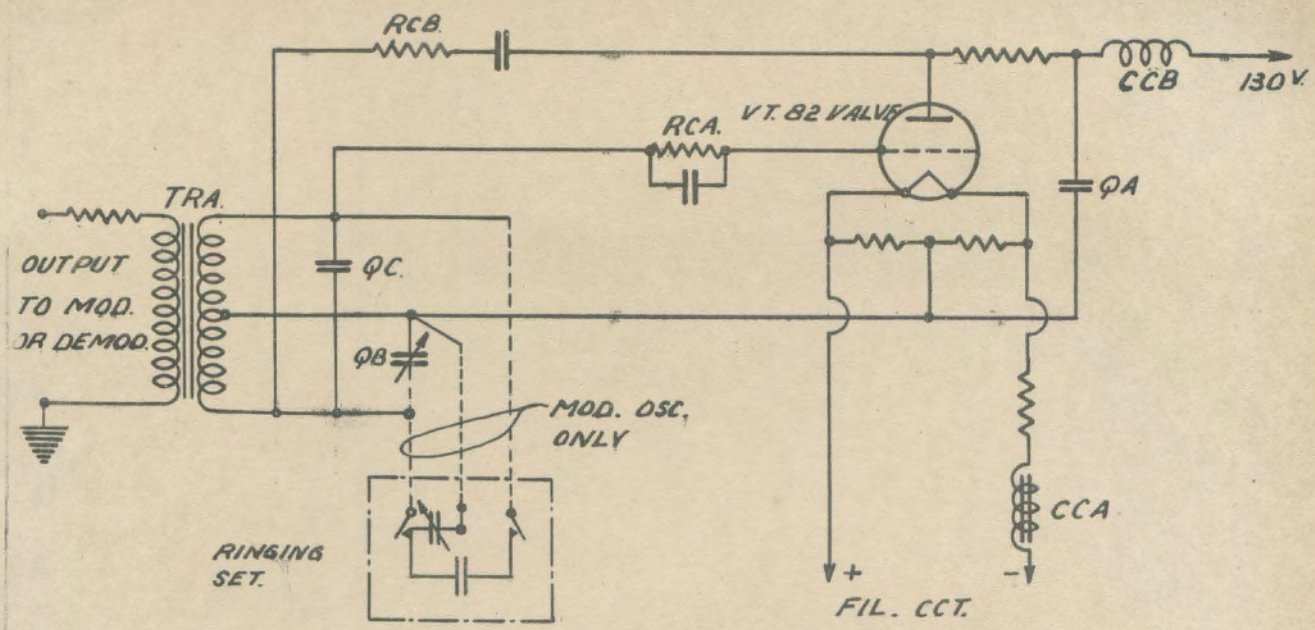

FIG. 20.
F AND FA SYSTEM
TRANS. OR RECV. OSCILLATOR
ISSUE 3 MODEL.

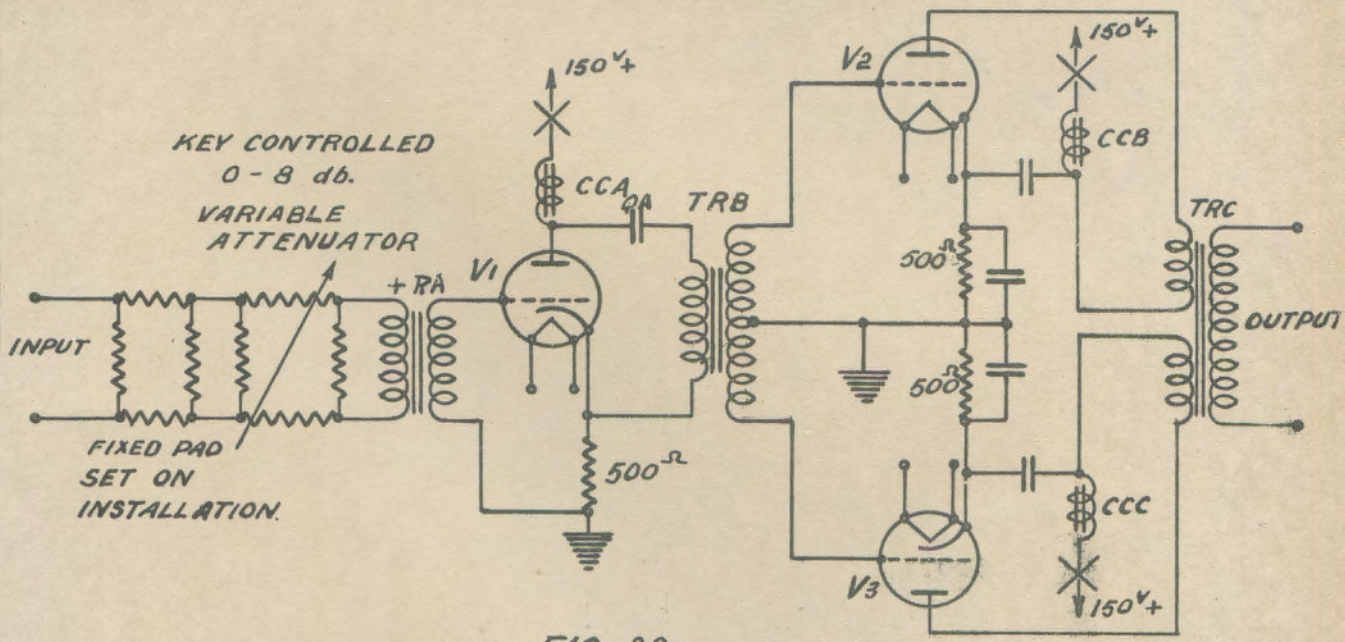

FIG. 22.
F AND FA SYSTEMS.
REPEATER AMPLIFIER
ISSUE 2 A.C. MODEL.

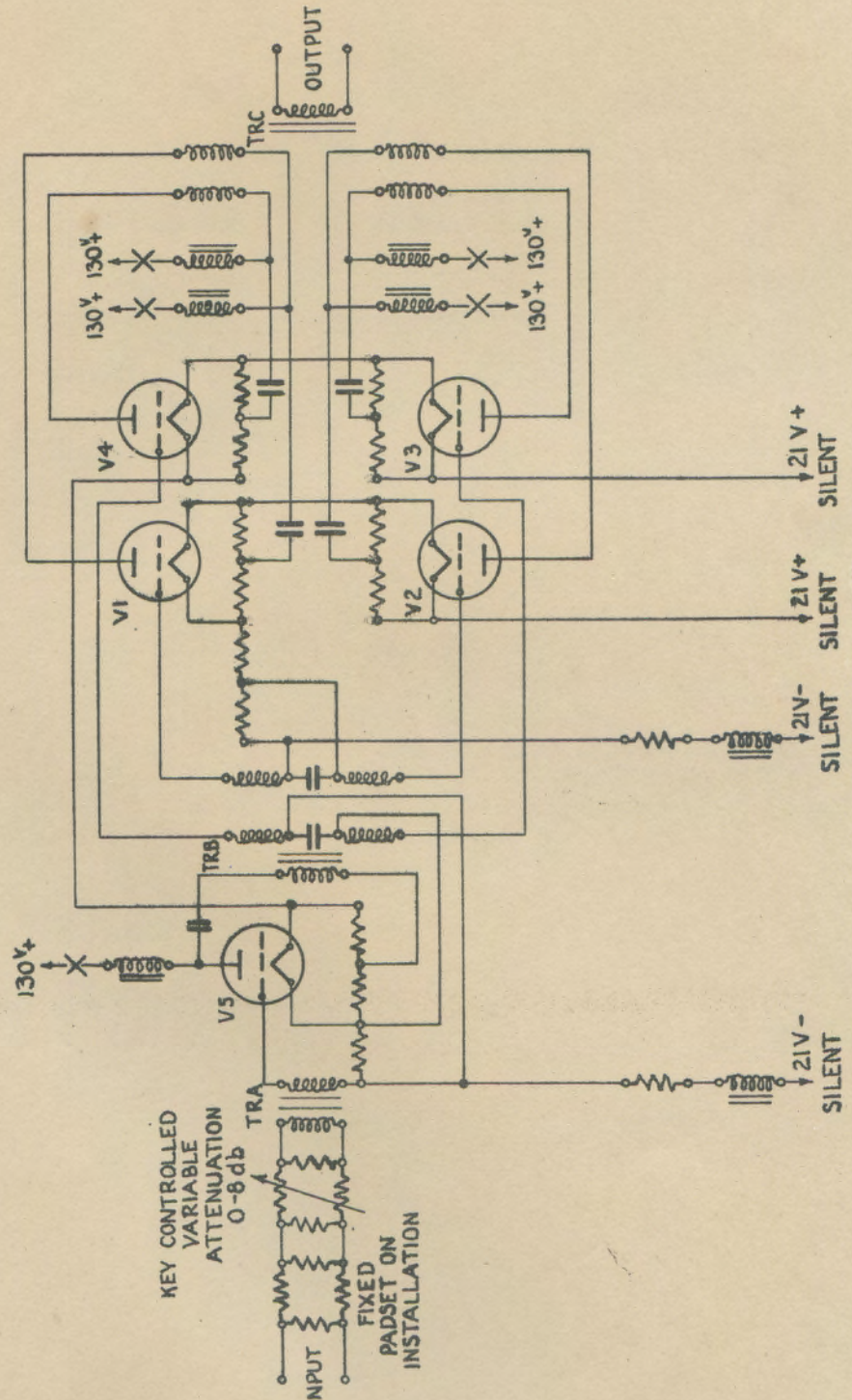

FIG. 23.

REPEATER ISSUE 2 BATTERY OPERATED MODEL

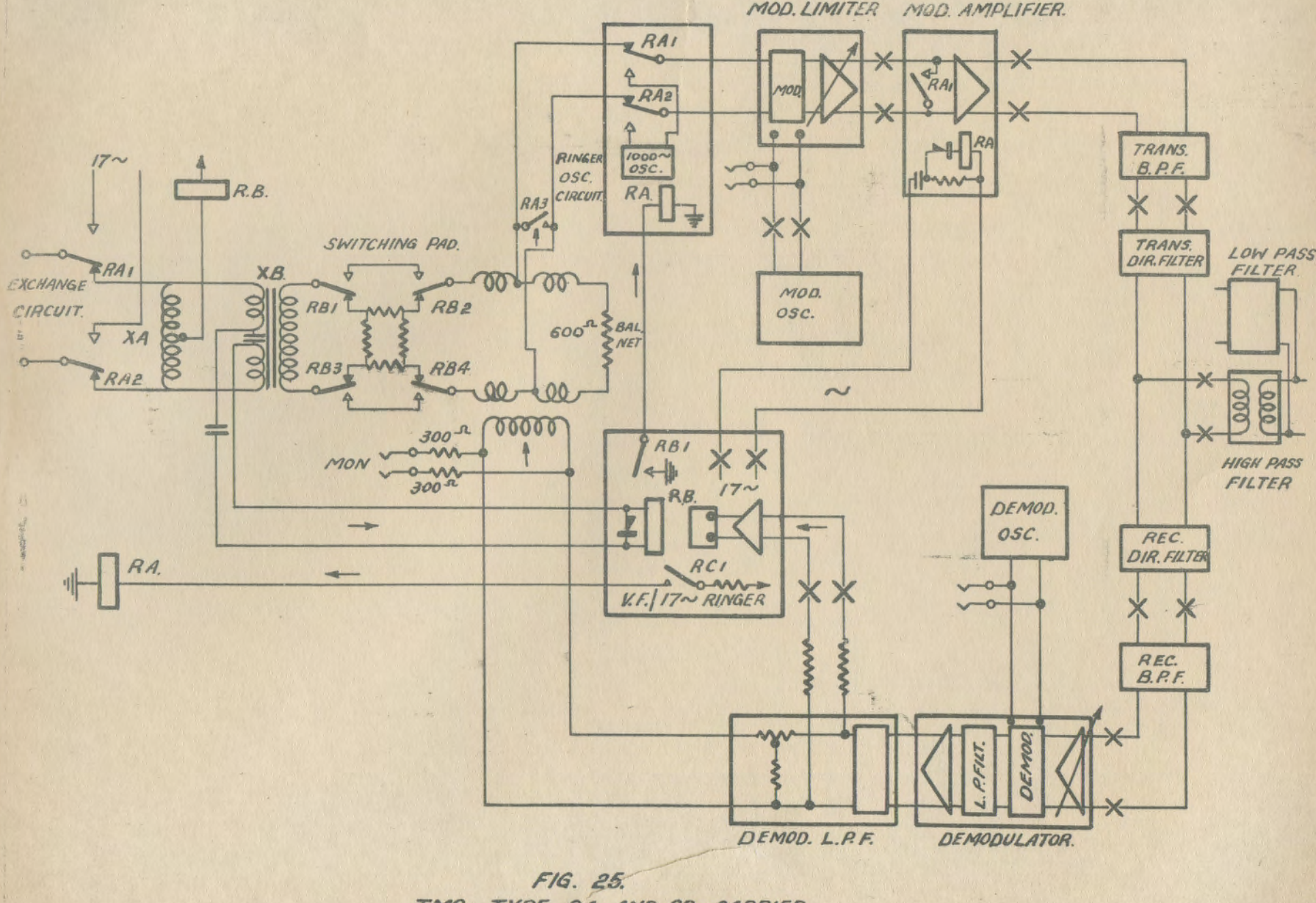

FIG. 25.
TMC. TYPE SA AND SB CARRIER
(X TEST JACKS.)

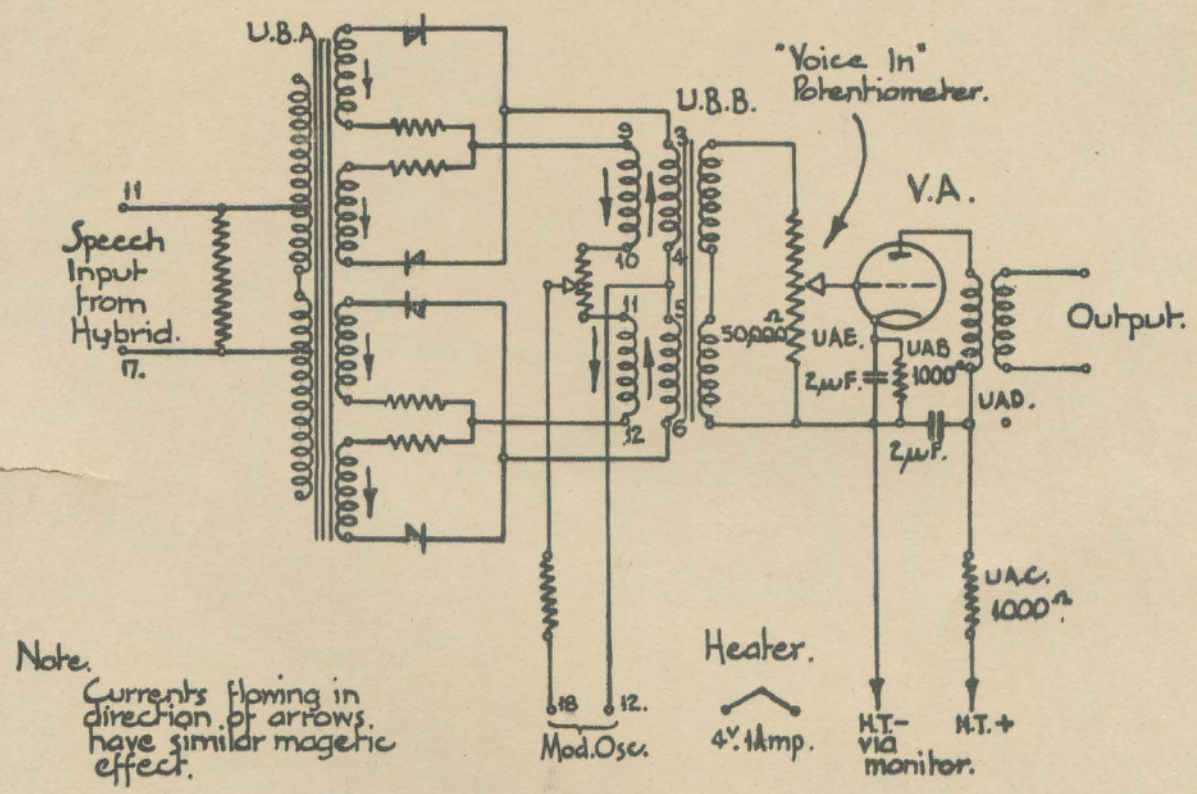

FIG. 26.

MODULATOR LIMITER SA, SB, SS & ST.

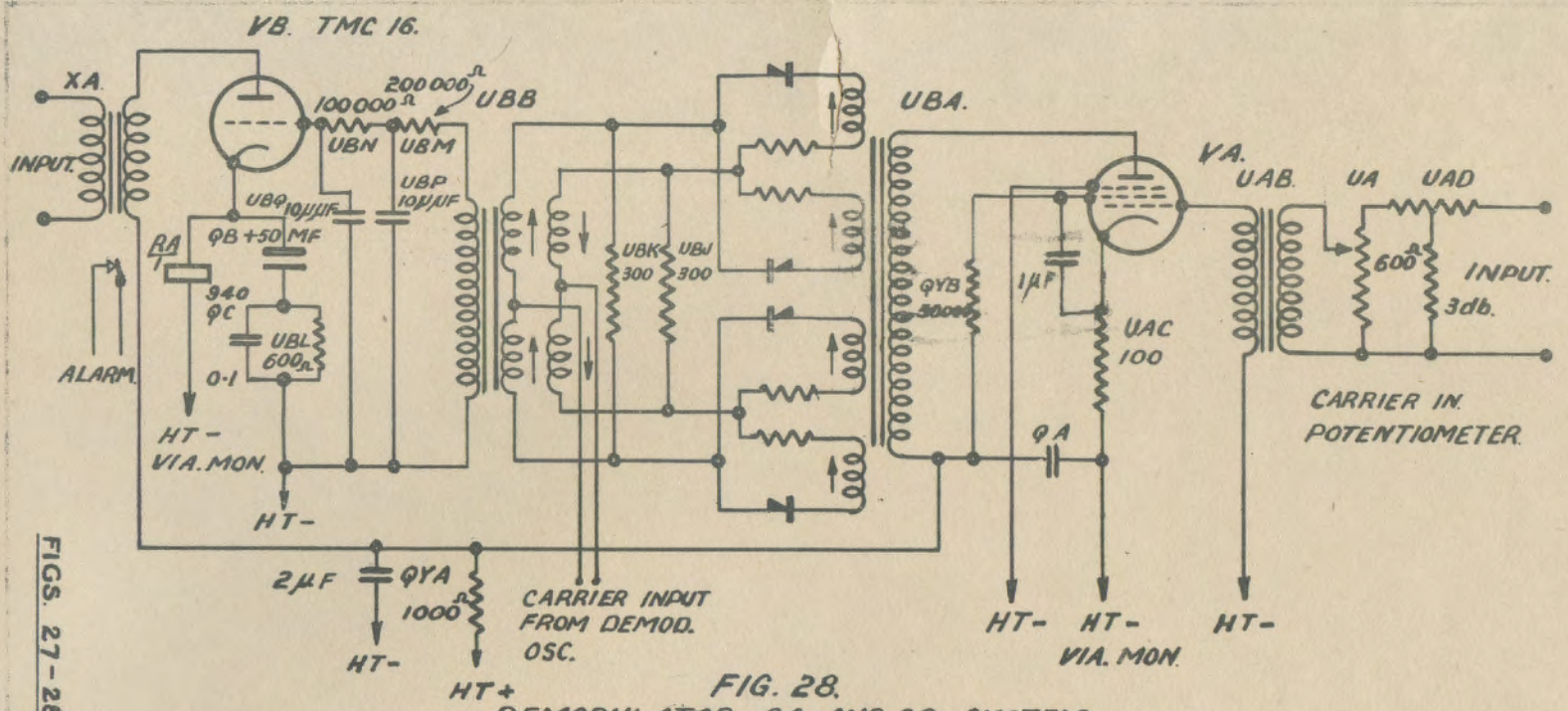

FIGS. 27-28

FIG. 28.
DEMODULATOR SA. AND SB SYSTEM
ALSO SS AND ST.

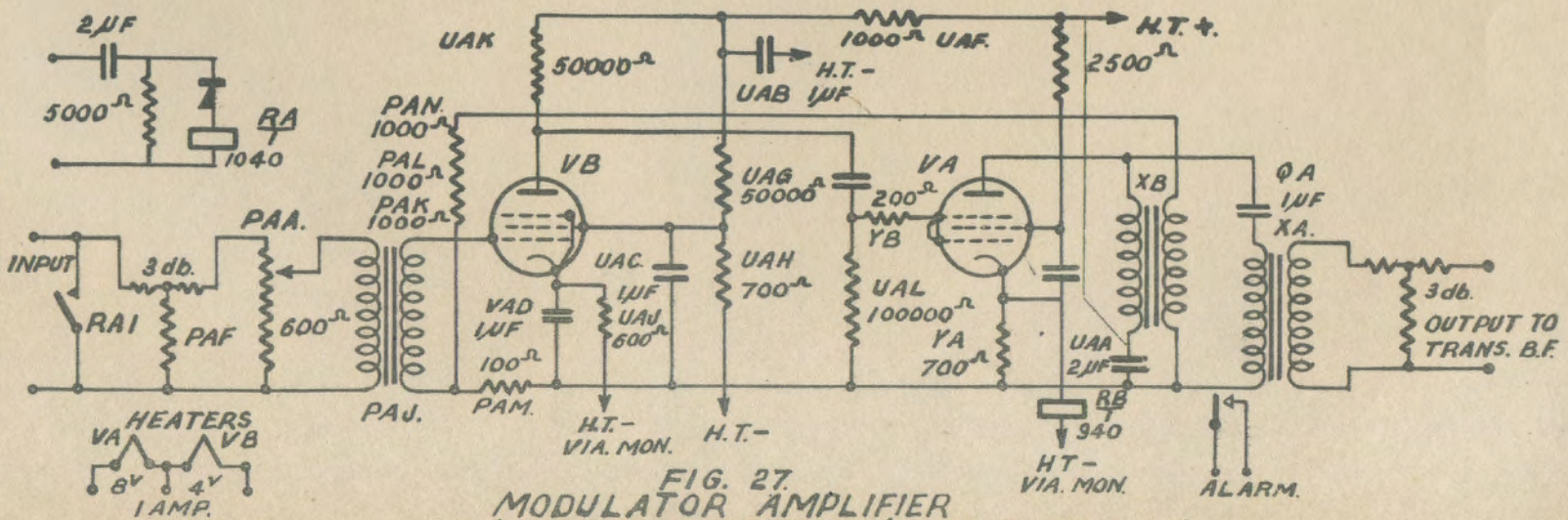

FIG. 27.
MODULATOR AMPLIFIER
SA AND SB SYSTEMS (ALSO SS AND ST)

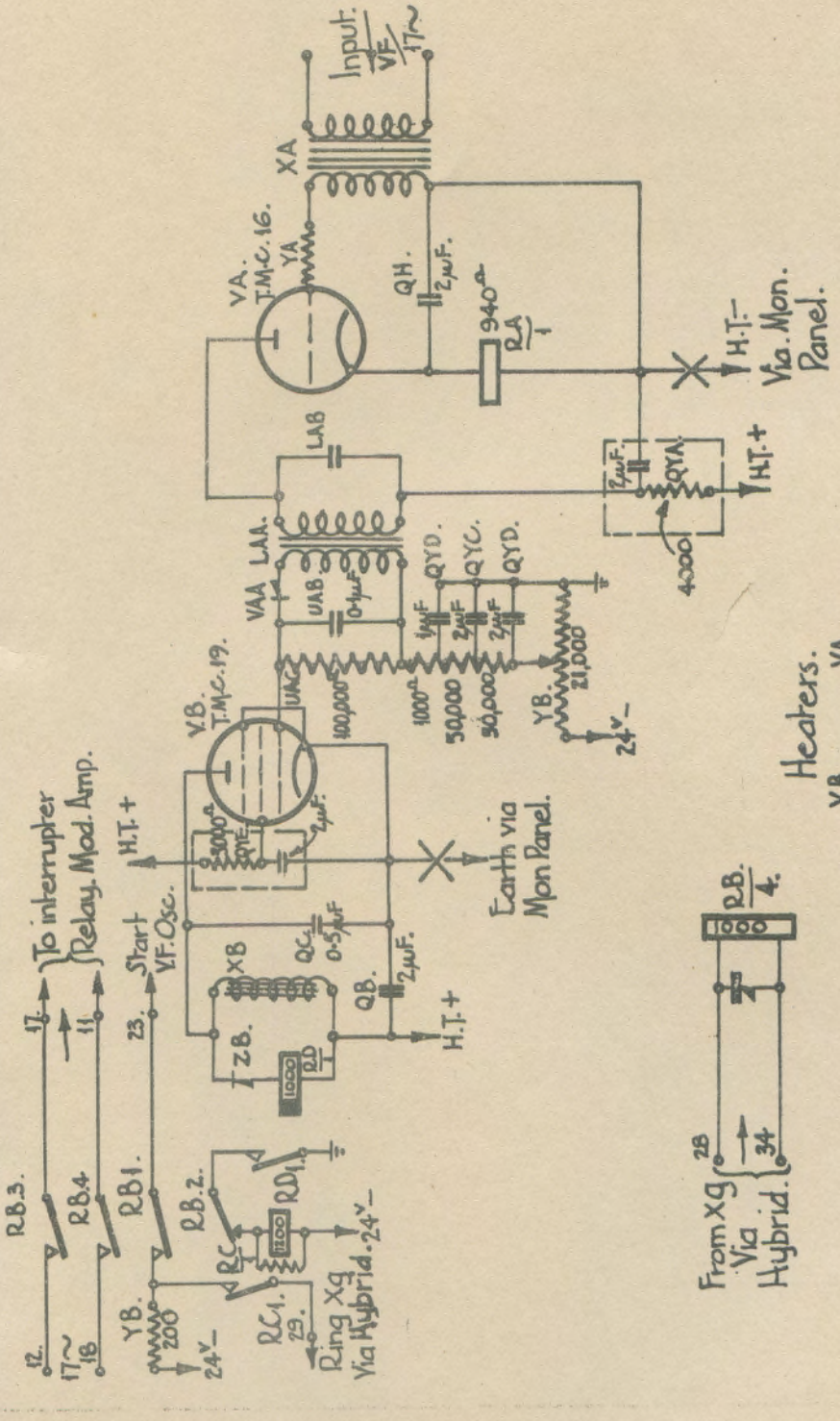

FIG 30.

RINGING RECEIVING CIRCUIT. SA & SB SYSTEMS.

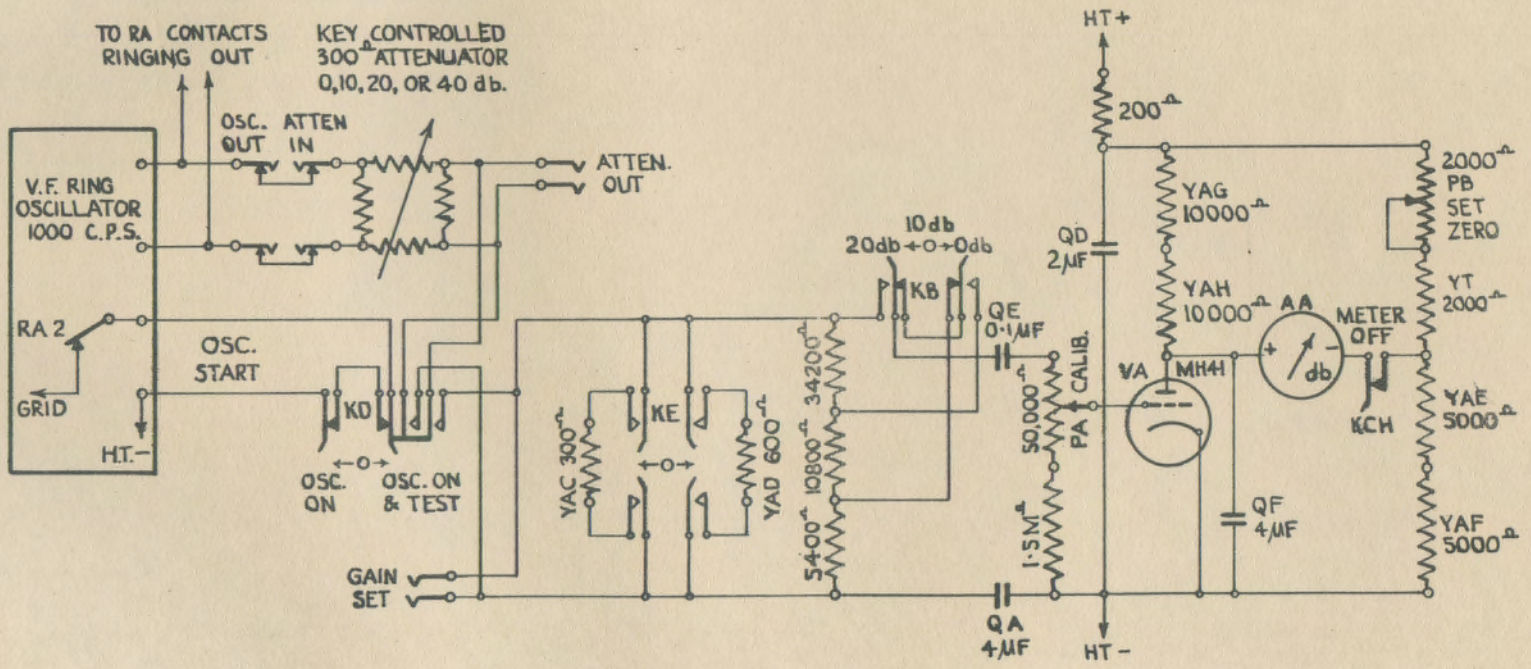

FIG. 31.

SA. SB. LEVEL MEASURING SET

(ALSO USED IN THE SS. & ST. SYSTEMS)

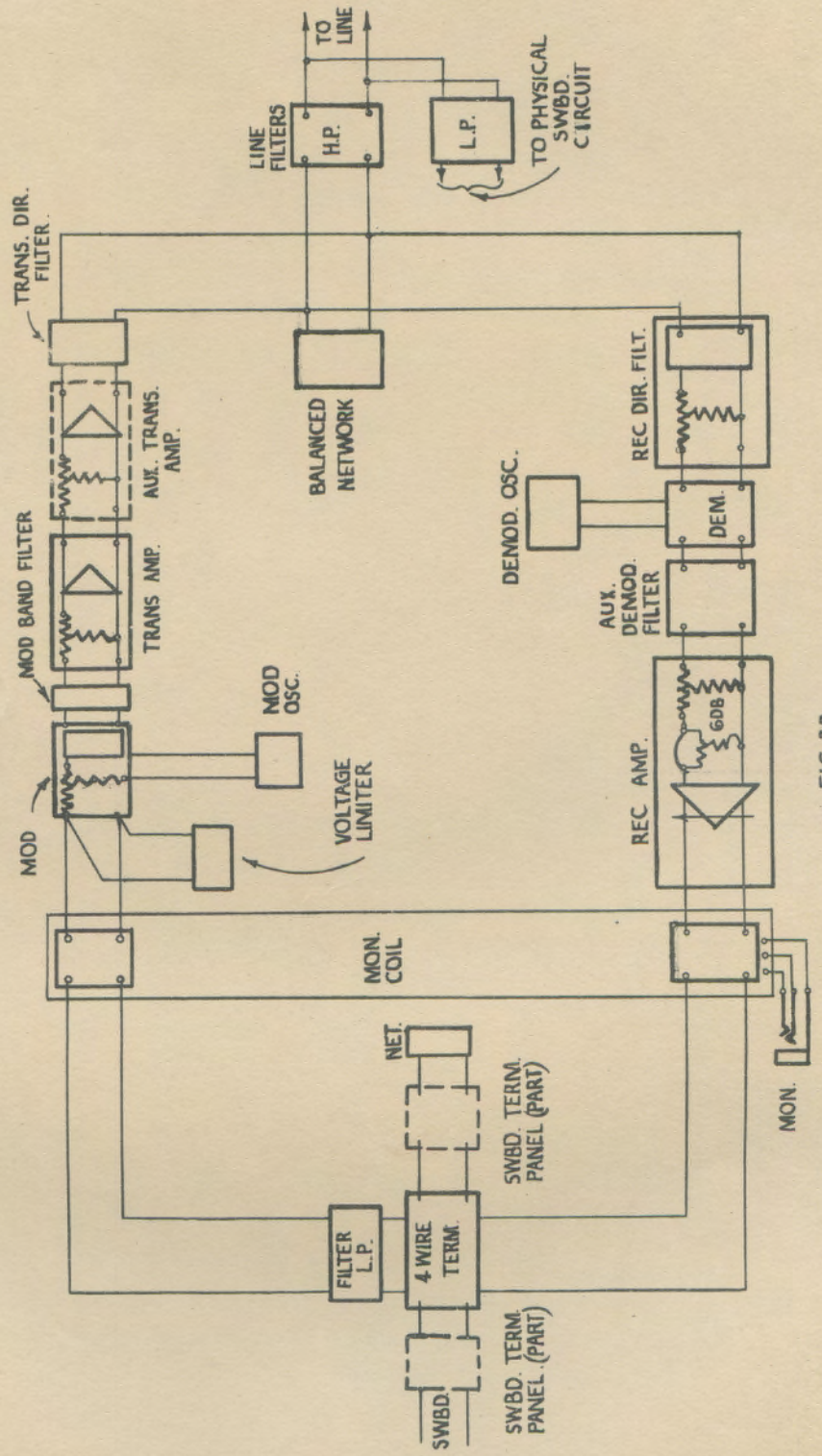

FIG. 32.

SINGLE CHANNEL SYSTEM BLOCK SCHEMATIC SOA & SOB.

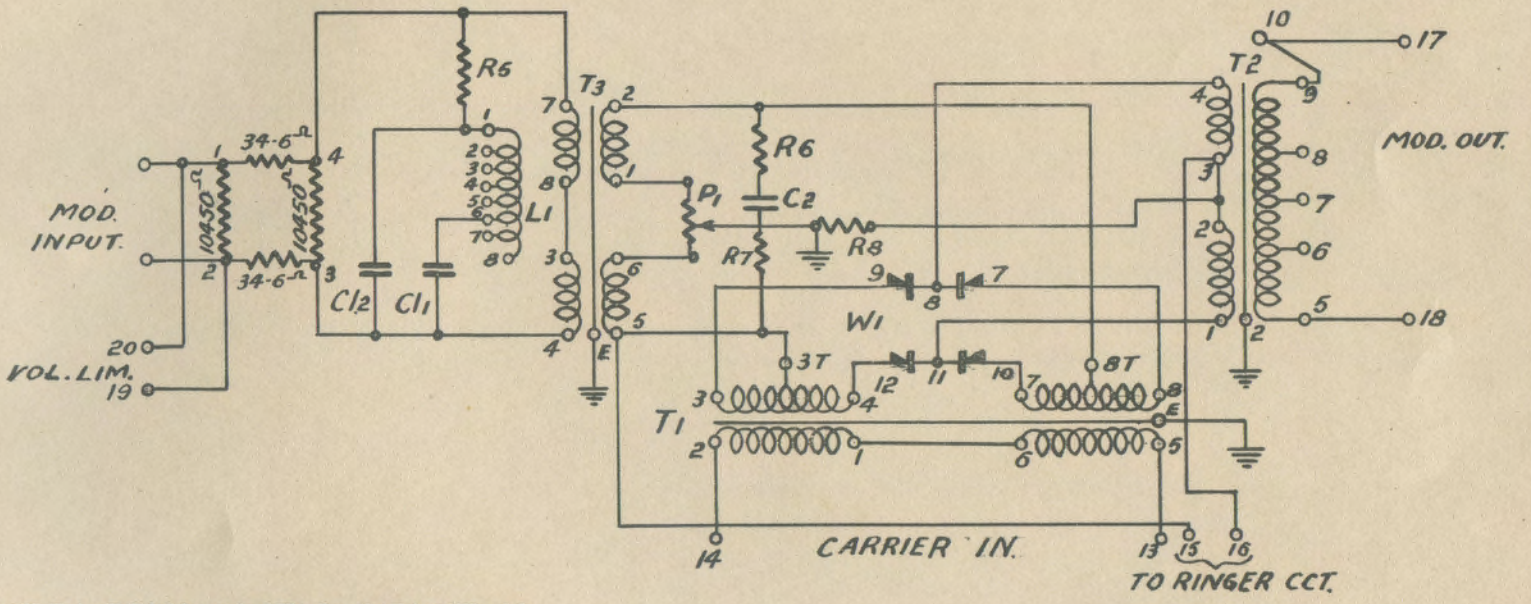

NOTE: DEMODULATOR CIRCUIT IS SIMILAR. DIFFERENCES ARE GIVEN IN PARA. 14-12

FIG. 35
MODULATOR CIRCUIT.
SOA. AND SOB. SYSTEMS.

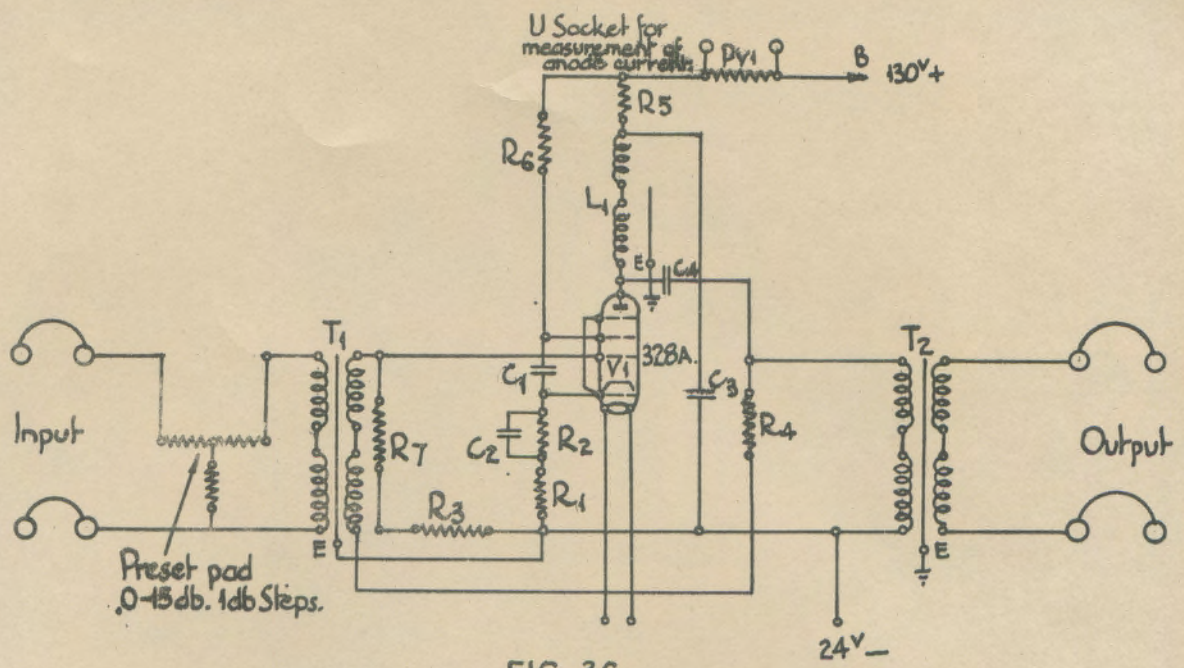

FIG 36.

TRANSMITTING AMPLIFIER. SOA & SOB SYSTEMS.

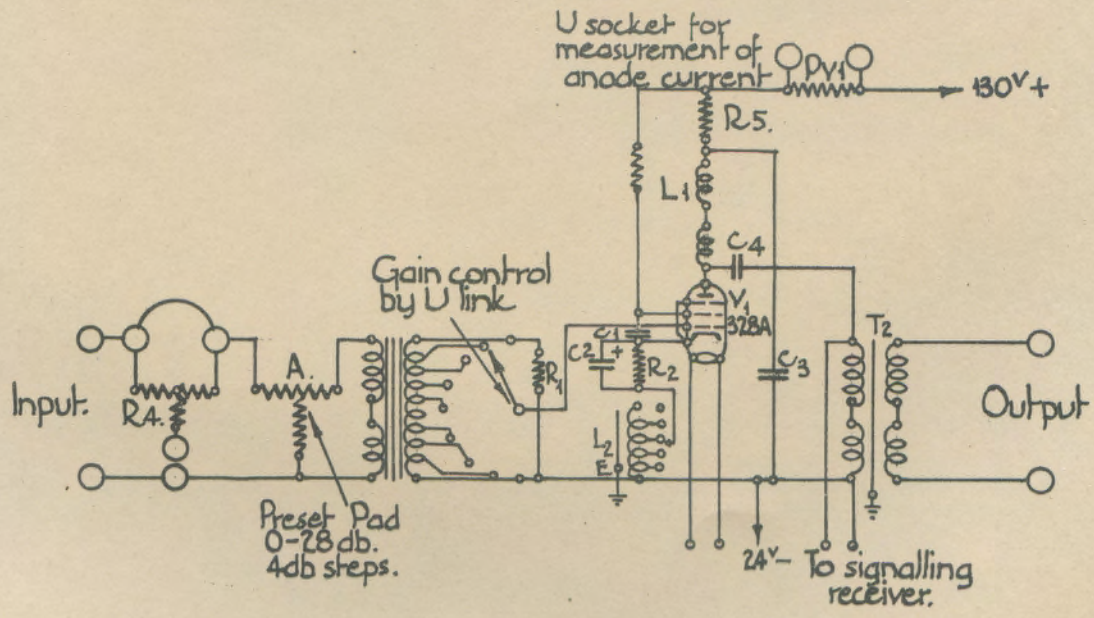

FIG. 37

RECEIVING AMPLIFIER SOA & SOB SYSTEMS.

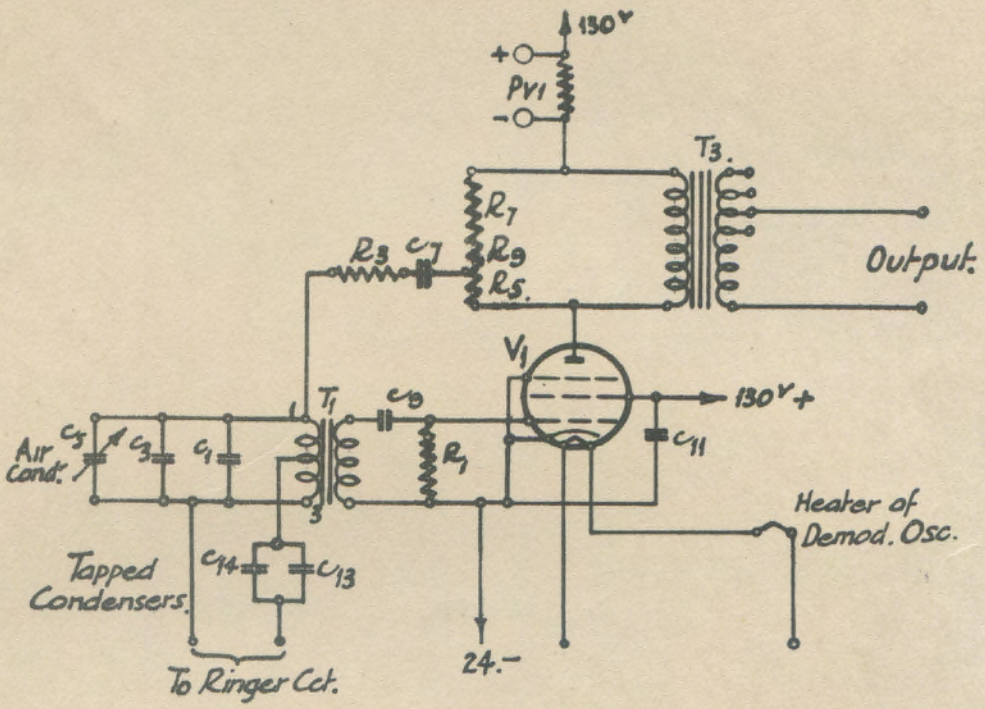

FIG 38

MODULATOR & DEMODULATOR OSCILLATOR
SOA & SOB SYSTEMS.

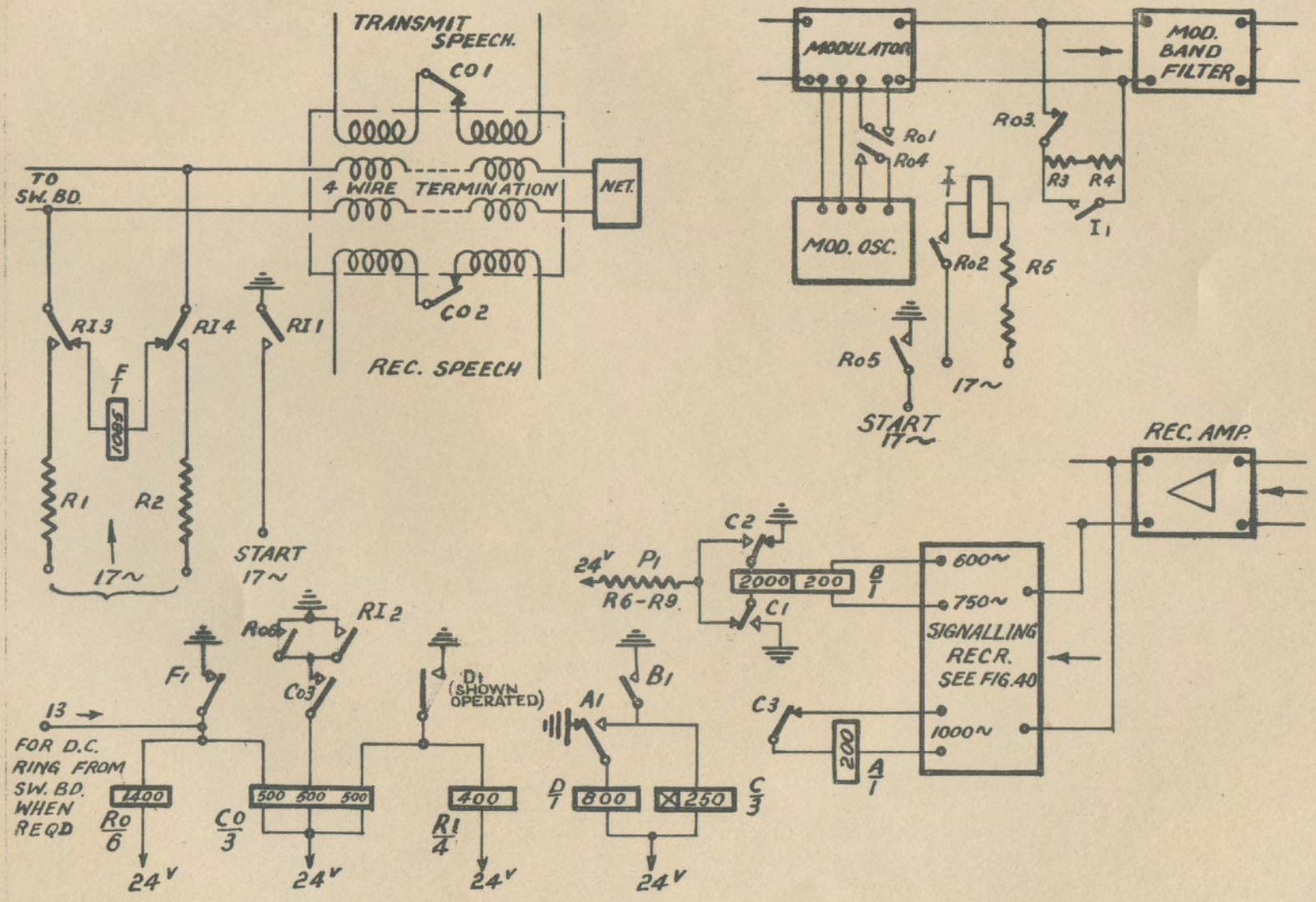

FIG 39.

RINGING CIRCUIT. SOA & SOB SYSTEMS.

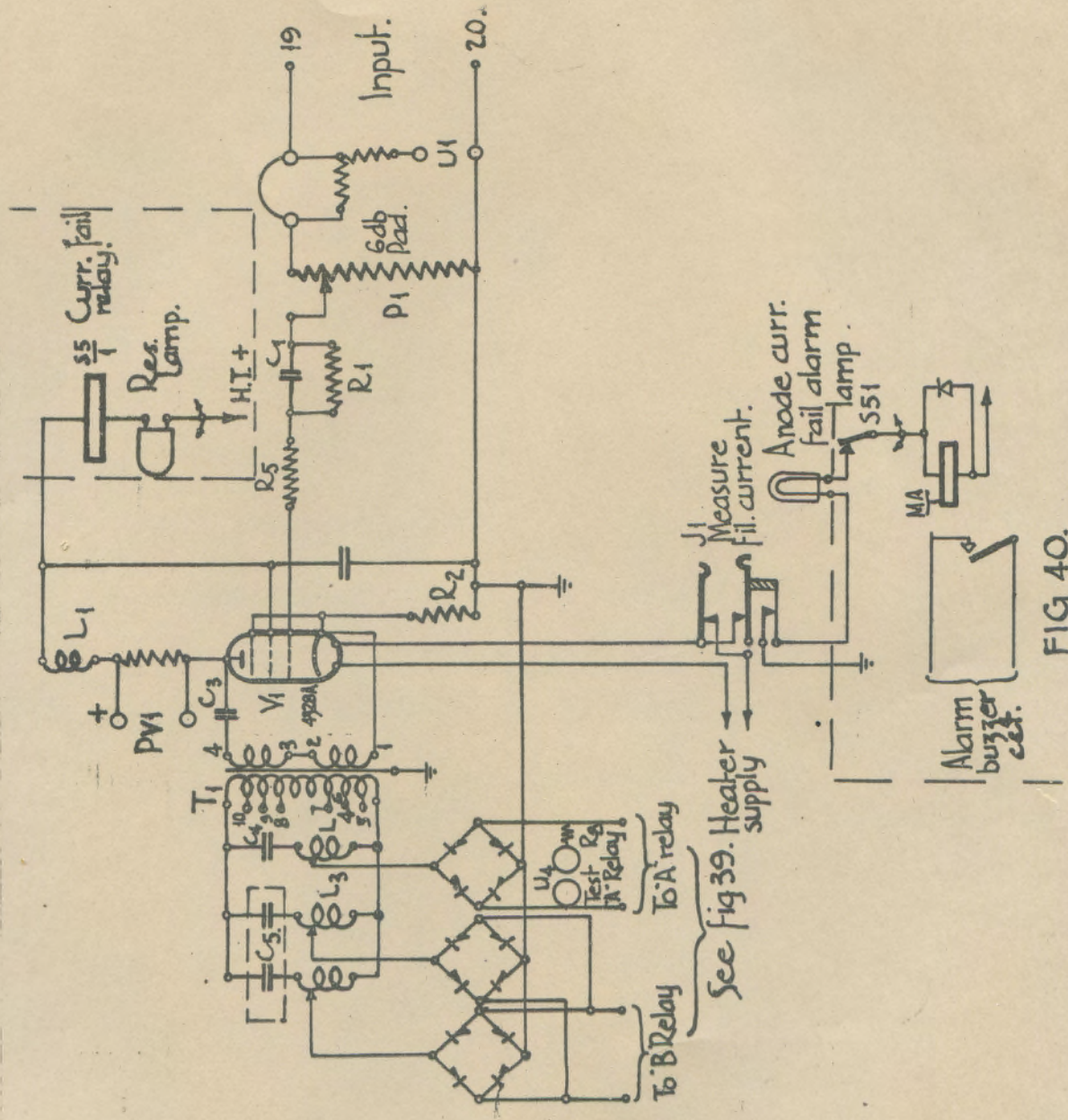

FIG 40.

SIGNALLING RECEIVER SOA & SOB SYSTEMS.

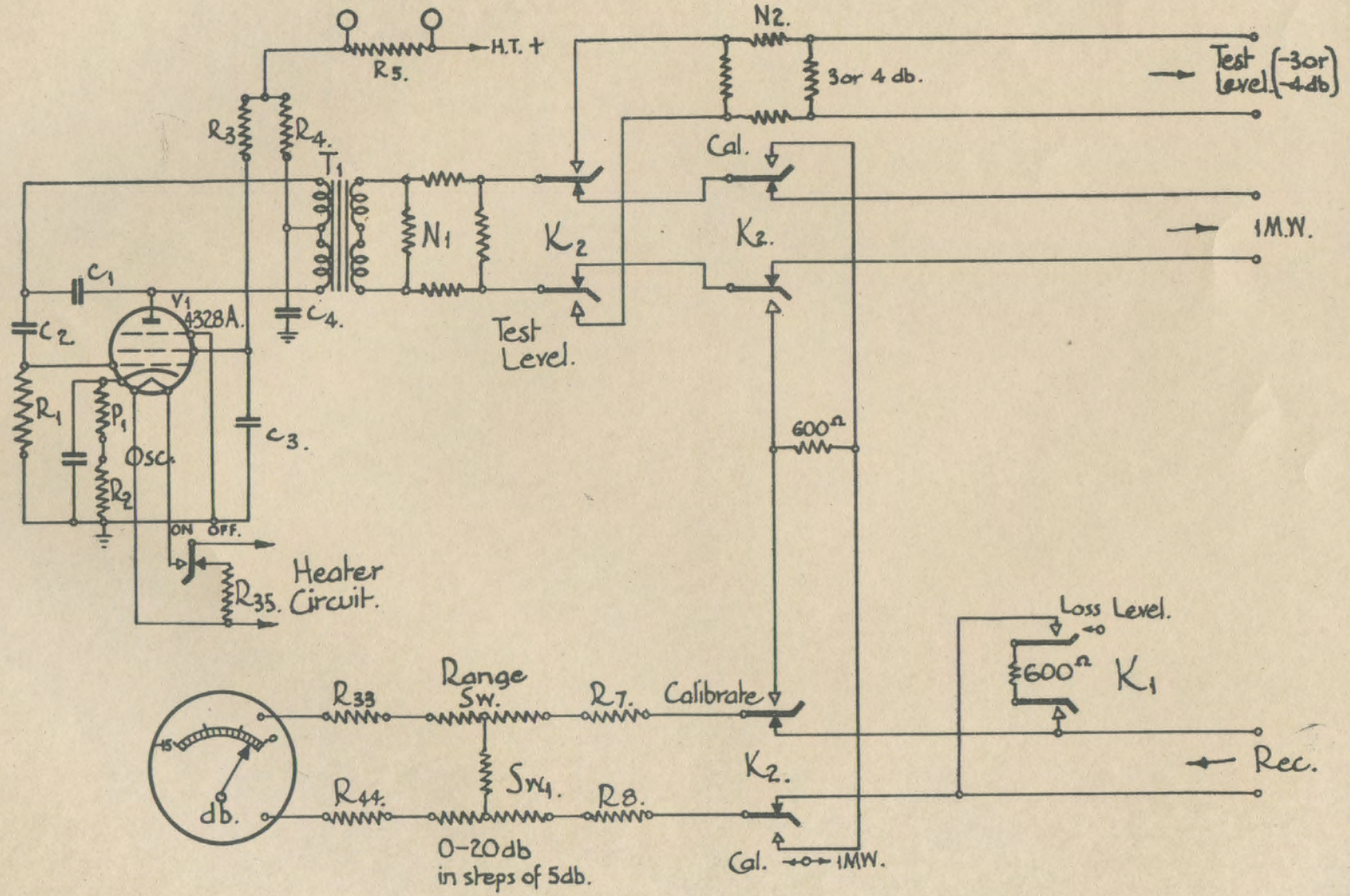

FIG. 41.

74108A. TRANSMISSION MEASURING SET 50A & 50B.

COMMONWEALTH OF AUSTRALIA.

Chief Engineer's Branch,
Postmaster-General's Department,
Treasury Gardens,
Melbourne. C.2.

COURSE OF TECHNICAL INSTRUCTION.

LONG LINE EQUIPMENT.

CONTENTS:

1. THREE CHANNEL CARRIER SYSTEMS - TYPE B.

2. SIGNALLING ON THE TYPE B SYSTEM.

3. THE TYPE C THREE CHANNEL SYSTEM.

4. THE TYPE T. SYSTEM.

5. DESCRIPTION OF OPERATION OF THE TYPE T.

6. TESTING EQUIPMENT FOR THE TYPE T.

7. VOLTAGE REGULATION.

8. TEST QUESTIONS.

---

1. THREE CHANNEL CARRIER SYSTEMS - TYPE B.

1.1 The general principles of the application of a three channel system to a physical circuit have been discussed in para. 3 of Paper 7. As for the single channel carrier working there are several different types depending on the manufacturer and in this paper the features of those in use in the Commonwealth will be discussed.

1.2 The Type B Carrier System is shown in block schematic form in Fig. 1. Different carrier frequencies are used in the two directions on each channel. This means that there are six different carrier frequencies, three for transmission in each direction. These frequencies are 6,000, 9,000 and 12,000 cycles in one direction and 15,000, 18,000 and 21,000 in the other direction. Each of these frequencies is furnished by an individual oscillator. In one direction the lower sideband is utilised on each channel, and in the other direction, the

/ upper

upper sideband. The carrier frequency itself is transmitted over the line along with the sideband, so that the actual bands of frequencies involved, are:-

4,000	to	6,000	cycles
7,000	to	9,000	"
10,000	to	12,000	"
15,000	to	17,000	"
18,000	to	20,000	"
21,000	to	23,000	"

Each two-way voice frequency line is obtained by using 2 carrier telephone channels, one in each direction and bringing them together by means of a hybrid transformer with suitable balancing equipment. The three channels which are derived are connected to the trunk switchboard through signalling and other equipment in such a manner that from an operating standpoint they do not differ from a physical trunkline.

1.3 Fig. 2 gives further details of the circuit arrangements. The voice frequency currents from the output of the hybrid transformer pass through a low pass filter, a potentiometer, and an input transformer to the modulator valve. The oscillator which provides current of thefrequency used on this channel is connected to the modulator valve through a potentiometer which provides means for adjusting the amount of carrier current supply. From the modulator band filter. The output circuits of the modulator band filters of the three channels are connected in series and the combined high frequency currents pass to the line through a sending transformer and the high pass filter. At the receiving terminal, the combined high frequency currents pass through the different channels. The current passes to the demodulator valve through an artificial line, a potentiometer, and a transformer. The artificial line and the potentiometer provide means for adjusting the gain of the receiving circuit. The output of the demodulator is amplified and then separated into two components by means of a pair of filters. One filter passes the voice frequencies to the hybrid transformer and so on to the voice frequency line, while the other filter passes the carrier current to a rectifier valve, which converts the alternating current into a direct current, which is used for signalling purposes.

1.4 The transmitting circuit is composed of the oscillator, modulator, and modulator band filter.

1.41 Oscillator. As previously stated, each carrier channel uses carrier current of two different frequencies, one for transmission in each direction. There is therefore an oscillator

/ in the

in the transmitting circuit of each channel, but an oscillator is not required for the demodulator as the carrier itself is transmitted. The frequency of the oscillator is determined by fixed condensers and a variable condenser. The magnitude of the carrier voltage impressed upon the grid of the modulator is subject to adjustment by means of a carrier potentiometer. The resistance associated with the oscillator unit and connected in the feedback circuit is for the purpose of establishing the output of the oscillator. A reduction in the value of this resistance will increase the output of the oscillator, but will decrease its frequency stability and increase the harmonics in its wave form. Too great an increase in the value of the resistance will prevent oscillation. All adjustments of resistances associated with the oscillator circuit are made when the channel is first put into operation and, thereafter, the carrier potentiometer is used to regulate the carrier output. Grid voltage for the oscillator valve is furnished by a 9-volt dry cell battery mounted on the channel panel.

1.42 Modulator. The modulator has one thermionic valve. When a channel is in operating condition, but speech is not being transmitted, the voltage wave applied to the grid of this valve is simply the carrier from the carrier potentiometer, and is transmitted through the modulator band filter over the line to the distant terminal as long as the channel is in operating condition. When speech is being transmitted, the carrier is modulated in the manner previously described. It should be noted particularly that in this system the carrier frequency and one of the sidebands are transmitted through the modulator band filter to the line. It is necessary, in order to obtain substantially undistorted reproduction of the voice after demodulation, that a comparatively large and sensibly definite amount of carrier current be present with the voice at the input of the modulator, and with the transmitted sideband at the input of the demodulator. The proper proportion between carrier and voice is maintained in this system at the sending end by means of the carrier and voice potentiometers. It will be noted that the voice potentiometer is connected in the circuit directly on the drop side of the input transformer. This potentiometer is usually operated on step 9.

/ Since

Since the output of the carrier potentiometer must pass through the secondary of the input transformer before reaching the grid of the modulator, the impedance of the voice circuit to carrier frequency must be constant if the carrier output is to be constant. The filter connected in the voice circuit on the drop side of the voice potentiometer is for the purpose of preventing changes in the output of carrier current from the modulator valve when the impedance of the voice circuit varies. Such variation in impedance is caused by changes in the voice circuit connected to the carrier channel or by alteration of the voice potentiometer setting. The filter keeps the voice circuit impedance constant as far as the carrier output of the oscillator is concerned, by shunting the carrier frequency through a comparatively low impedance path.

The output of the modulator is delivered to the output transformer, which acts as an impedance equaliser between the modulator plate circuit and the band filter. The filaments of the modulator and oscillator valves are connected in series with two external resistances. The grid voltage of the modulator valve is obtained by making use of the drop in the oscillator filament and a 2 ohm resistance, in addition to the 9 volts of the dry cell battery.

1.43 Modulator Band Filter. The filter (M.B.F. of Fig. 2) transmits a frequency band approximately 2,200 cycles in width, situated in the frequency scale so as to include the carrier and the upper or lower side-band, as the case may be. In so doing it serves a double purpose. First, it suppresses all frequencies present in the modulator output except the carrier and side band transmitted; and, second, it keeps from entering the transmitting channel the carrier and side-band of any other channel, either transmitted through the modulator band filter at the same terminal or received over the line from the distant terminal. The lower sideband is transmitted in the channels operating on the lower group of carrier frequencies (6,000, 9,000 and 12,000 cycles) and the upper side-band in the channels operating on the upper group (15,000, 18,000 and 21,000 cycles). This arrangement gives the maximum possible separation (3,000 cycles) between the two groups of frequencies transmitting in opposite directions, and allows the groups to be separated readily at repeaters by directional filters. The band filters are designed for series connection, and are in series on the line side. The currents they transmit are thus superimposed on each other and the resultant group of frequencies is

/ delivered

delivered to the high frequency sending transformer. The line side of this transformer and that of the high frequency receiving transformer in series are connected to the line.

1.5 Carrier Receiving Equipment. The incoming carrier currents reach their respective channels in the carrier receiving equipment practically by a reversal of the same process by which they are transmitted to the line from the carrier transmitting equipment. The combined incoming frequencies are separated and directed to their respective carrier receiving channels by the demodulator band filters. The circuit of the receiving channel is shown in Fig. 2 and is described with reference to the principal units of equipment -

Demodulator Band Filter,
Demodulator,
Demodulator Amplifier,
Voice and Carrier Filters,
Rectifier,
Artificial Lines.

1.51 Demodulator Band Filter. The line sides of the demodulator band filters are connected in series to the drop side of the high-frequency receiving transformer (see Fig. 1). The frequency range of the demodulator band filters is, of course, the same as that of the corresponding modulator band filters at the distant terminal. Each demodulator band filter selects and transmits into the demodulator circuit the carrier and side-band sent out on the line at the distant terminal through the corresponding modulator band filter of the same frequency range.

1.52 Demodulator. The demodulator circuit, which has only one thermionic valve, is shown in Fig. 2. The currents from the demodulator band filter pass through an artificial line and the "Receiving Potentiometer" before reaching the demodulator input transformer. When the channel is in operating condition, but speech is not being transmitted, carrier current only is received. When speech is being transmitted, a side-band is received from the demodulator band filter in addition to the carrier, and is applied with the carrier to the grid of the demodulator. The products of demodulation give the original voice wave. The remaining components are of high frequency beyond the voice range, the greatest part of them being due to the carrier whose energy is large compared with that of the voice. The filaments of the demodulator, demodulator amplifier, and rectifier are connected in series, the

/ circuit

circuit containing also three external resistances. The grid voltage of the demodulator is obtained by making use of the voltage drop in resistance YA of 1 ohm.

1.53 Demodulator Amplifier. The output of the demodulator is applied to the amplifier valve through a transformer. In an ideal amplifier this would be done without distortion and the process may be contrasted in this respect with that of the modulator or demodulator, both of which are purposely operated to distort. The grid voltage of the amplifier is obtained by making use of the drop in that portion of the filament circuit including the demodulator filament and a 1-ohm resistance YB.

1.54 Voice and Carrier Filters. The output circuit of the demodulator amplifier is connected to two filters. One of these is the voice filter, which is connected to the amplifier through a transformer. The other is the carrier filter, which is connected directly to the amplifier output circuit, being in parallel with the line side of the output transformer. It was mentioned concerning the demodulator that one of the components of its output when speech is being transmitted is the original voice wave. The voice filter is designed to pass frequencies within the voice range only. The voice wave, therefore, after passing through the amplifier with the high frequency components of the demodulator output, is separated from them by the voice filter and transmitted to the receiving channel of the voice frequency equipment. The carrier filter is designed to pass only frequencies above the voice range. Therefore, as long as the channel is in operating condition, whether speech is being transmitted or not, the carrier and all other high frequencies present due to modulation or demodulation are passed through this filter to the rectifier.

1.55 Rectifier. The rectifier valve provides a means for signalling over the carrier channel and for observing whether or not the channel is in proper operating condition. The high-frequency components of the demodulator amplifier output after passing through the carrier filter, enter the grid circuit of the rectifier valve through the output transformer. The rectifying action of the valve produces a direct current component in the plate circuit which passes through a relay and holds it operated. The exact value of this current varies greatly in different systems, in different channels of the same system, and in the same channel under different conditions, and must be determined in each case by the maintenance routine. Hcwever, a value of 6 mils may be considered average. This current continues to

/ flow

flow as long as carrier current is supplied to the line at the distant transmitting end. This fact makes it possible to pass a signal through the carrier channel equipment in the following manner:-
The output of the modulator is short-circuited at the originating end. This cuts off the carrier current from the line and reduces the plate current of the rectifier valve at the receiving end to zero. This releases the relay which passes the signal on to the voice frequency equipment. The plate circuit of the rectifier valve also includes a meter which reads the plate current in milli-amperes. One of these meters is provided for each channel at each terminal. Each meter is equipped with an index by means of which the attendant may indicate on the scale the proper value of rectified current for each channel. During a ringing interval or a failure of the carrier current for any other reason, the current through the meter drops to zero. It shows, also, any increase or decrease in the amount of carrier current received and thus indicates the condition of the channel.

1.56 Voice Frequency Equipment. A hybrid transformer and balance network is necessary to connect the two wire line to the carrier apparatus. To prevent over-loading of the modulator, it is necessary that the transmission equivalent of the circuit between the hybrid transformer and the trunk switchboard should be not less than 6 db. As the equivalent of the voice frequency line is low in many cases, a 6 db. attenuator is inserted directly on the voice frequency line side of the transformer.

2. SIGNALLING ON THE TYPE B SYSTEM.

2.1 As previously mentioned, each of the carrier channels is terminated at the trunk switchboard in the same manner as any other trunk line. This practice makes it necessary to use special equipment at each carrier terminal as the 16 cycle currents normally used for ringing cannot be transmitted over the carrier channel. During normal operation of a channel the carrier current is transmitted over the line to the distant terminal, and the ringing is arranged by shutting off the carrier current from the line and using at the receiving end apparatus responsive to the absence of this current.

2.2 At the transmitting end, when the operator rings, 16 cycle ringing current operates an A.C. relay which, in turn, breaks the circuit of a normally operated direct current relay D. A contact of this relay D1, when released, short-circuits the output of the modulator and cuts off the supply of carrier current to the line.

/ 2.3

2.3 At the receiving terminal during an incoming ring, the failure of the carrier current reduces the rectified current in the plate circuit of the rectifier valve practically to zero, and releases a relay P normally operated in the rectifier plate circuit. The release of this relay is used in a similar manner to the system shown in Fig. 7 of Paper 8 to operate further relays in the voice frequency circuit to connect 16 cycle ringing current on that circuit to the trunk switchboard.

2.4 Further information on the type B system is contained in a booklet issued by the A.P.E.U. covering a series of articles reprinted from their Journal.

3. THE TYPE C THREE CHANNEL SYSTEM.

3.1 This system is a carrier-suppressed, single side-band type and requires for each modulator an oscillator as a source of carrier supply. Since in this system the carrier frequency is not transmitted, it is necessary to provide an oscillator at the receiving end for each demodulator, the oscillator at the receiving end must supply exactly the same frequency as the corresponding oscillator at the transmitting end. The oscillator circuits therefore must not exhibit any appreciable frequency drift.

3.2 Different carrier frequencies are used for transmission in opposite directions as shown in Fig. 5 of Paper 8. There are several type C systems known by different letters following the C for instance, CN3, CS3, all developed from the same principles described in this section but differing only in the carrier frequencies employed. In Fig. 5 of Paper 8 the frequency allocation for two of these are given and it also indicates that in some cases the upper side-band is transmitted and in other equipment the lower is used. The lowest frequency in the CN3 system is 5 k.c. This limits the band which can be used on the physical. To increase the frequency band available for a programme channel on the physical the CS3 has a lower frequency limit of 6.2 k.c. In this latter case the carrier frequencies in one direction are 6.2, 9.4 and 12.7 with the transmission of the upper side-bands while the carriers in the opposite direction are 20.8, 24.45 and 28.3 with the transmission of the lower side bands. Channel 1 uses the 12.7 and the 24.45. Channel 2 the 9.4 and 20.8 and Channel 3 the 6.2 and 28.3. As pointed out this grouping is on account of the need for minimizing crosstalk. The problem of intermediate repeater amplification is simplified where the opposite directional frequencies are thus separated and grouped. The single side-band transmission employed reduces by about one half the frequency band that would otherwise be required for each channel. The

/ carrier

carrier is not transmitted, as the presence in the system of carrier currents of the large magnitude required for a "carrier transmitted" system not only requires greater amplifier load capacity at the repeaters, but may increase the possibility of troublesome cross-talk and noise interference. The selectivity requirements of the band filters would also become more severe to keep the carrier of one channel out of the other channels in the system.

3.3 It may be as well to refer to Fig. 7 of Paper 7 and the accompanying description and to compare the general requirements with the simplified layout of the type C system shown in Fig. 3 attached. When a subscriber is connected to one of the channel ends, for example, No. 1, speech currents pass through the hybrid transformer, thence into the modulator circuit where they are caused to modulate the high-frequency carrier current. The resultant modulated bands of frequencies pass through a band filter allowing only the desired band to pass to the transmitting amplifier, thence this band passes through a directional filter and a high-pass filter to the line circuit. The high-pass filter last referred to in association with its complementary low-pass filter, forms a line filter set whereby the regular voice range currents are separated from the higher frequency carrier current at both terminal and repeater offices.

3.4 At the other end the combined carrier currents pass through the directional filter and are again amplified in the receiving amplifier. At the output of the amplifier the different carrier channel bands of frequencies are selected one from another by the band filters, thence they pass to the demodulator circuit, are demodulated to their original form and then pass from the output connection of the hybrid transformer to their respective terminations. The transmitting and repeater amplifiers of the type C system are identical and have a maximum output of approximately 1 watt.

3.5 Circuit Arrangements. Fig. 4 shows diagrammatically in somewhat greater detail one channel of a terminal of the type "C" system. The modulator circuit has two valves in "push pull" with grid bias connected so that the carrier frequency is balanced out. A separate oscillator valve circuit of exceptional frequency stability supplies the carrier. The frequency allocation requires the transmission of only the upper or lower sideband frequencies, and the band filter at the output selects the desired band, rejecting the other products of modulation as well as the amplified voice frequencies which are incidentally transmitted through the modulator unit. This side-band current in conjunction with the corresponding currents of the other two

/ side-bands

side-bands of the outgoing channels passes through the common transmitting amplifier. This is a two-stage thermionic valve unit having four valves in the output circuit arranged in parallel push-pull connection to insure the required load carrying capacity.

3.6 The circuit then leads through a directional filter of either low pass or high-pass type which distinguishes between the band groups of the opposite directions of transmission as required by the allocation of frequencies. The amplified currents pass through the high pass filter of the line filter set and thence to the line circuit.

3.7 In receiving, the side-band frequencies, after separation from the voice currents by the line filter set, pass through the directional filter and an amplifier similar to that used at the transmitting terminal. While the power output required at the receiving amplifier is usually small as compared with that required at the transmitting amplifier, the same unit is used for the two positions to provide flexibility in the adjustments of the receiving gains of the separate channels and for the purpose of economy in production. The different channel currents in the output of the amplifier are selected by the respective receiving band filters and thence pass into the demodulator circuits. In the demodulators the voice frequencies are derived by the modulation of the side-band currents with a carrier frequency supplied by a local oscillator whose frequency is adjusted accurately to agree with that of the corresponding transmitting modulator at the farther terminal.

3.8 The output of the demodulator circuit includes a low-pass filter for suppressing the unwanted components of demodulation, and the circuit thence leads to the channel terminal through the hybrid transformer. The filament current in the various circuits of the Type C systems are automatically regulated by ballast lamps in the individual circuit leads. Ballast lamps have been dealt with in para. 9 of Paper 2 of Long Line Equipment. Some of the older systems operated by the Department have hand operated rheostats for adjusting the filament currents.

3.9 Where a repeater is necessary to overcome the effects of the line attenuation, the general form will be that shown in Fig. 18 of Paper 4. At the repeater point the group of bands comprising the three channels passes through the high-pass line filter circuit, thence through a directional filter and line equalizer to the amplifier circuit and outward through the directional and line filter circuit to the next line section.

/ 3.10

3.10 Signalling. In the type C system there is no signalling apparatus incorporated in the carrier terminal proper. In order to provide signalling it is necessary to have special ringing equipment. The band of voice frequencies passed over the carrier channel is approximately 300-2700 c.p.s. Therefore, provision must be made to convert the ordinary 16 cycle ringing current from the switchboard to a frequency within the transmitted band, and facilities must be given at the receiving end to convert the transmitted ring backs to 16 cycles per second together with means to prevent false operation by speech. The 1000 cycle V.F. ringer as used on repeatered physical trunks and described in Paper 6, is used.

4. THE TYPE T SYSTEM.

4.1 These are manufactured by the General Electric Co. Ltd. Those included in the Department's plant consist of the T1, T2 and T5 systems, which differ only in the frequency allocations. The system is fundamentally the same as the type "C" 3 channel, as the following table will show:-

Type of System	Side bands Transmitted	
	Direction A - B	Direction B - A
T1	Upper of 6.3 k.c's. " " 9.4 k.c's. " "12.9 k.c's.	Lower of 20.7 k.c's. " " 24.4 k.c's. " " 28.5 k.c's.
T2	Upper of 6.3 k.c's. " " 9.4 k.c's. " " 12.9 k.c's.	Upper of 19.8 k.c's. " " 23.7 k.c's. " " 27.7 k.c's.
T5	Upper of 7.7 k.c's. " "10.9 k.c's. " " 14.3 k.c's.	Upper of 19.8 k.c's. " " 23.7 k.c's. " " 27.7 k.c's.

The band of sideband frequencies transmitted over each channel is approximately 2400 cycles wide and corresponds to voice frequencies applied to the channel input of 300 c.p.s. to 2700 c.p.s.

/ 4.2

4.2 Signalling over the type T system is accomplished with 1000 cycle ringers as for the type C and described in Paper 6. These are separate units to the carrier system and are not necessarily of G.E.C. manufacture.

4.3 Power Supply. The terminal and repeater equipment is designed to operate from two power supplies, one for the valve anodes at 130 volts, and the other for the valve filaments and relays at 24 volts. These may be derived from batteries or from suitably smoothed rectifiers operating from commercial A.C. mains. When rectifiers are used, the 24 V. leads for the relay circuits need not be completely smoothed. No grid bias batteries are required, as the valves derive their bias from voltage dropping resistors in the filament and anode circuits. To give stable performance, the filament and anode supply voltages should be kept as nearly constant as possible. Usually the anode supply can be kept within suitable limits without the use of automatic regulation, but the filament supply is required to be kept within very close limits, viz. 21 $\pm$ 0.5 volts. To drop the 24 volt supply to this value, and maintain it within the required limits, an automatic carbon pile voltage regulator is connected in the 24 volt leads to the filament circuits of the Type T system. Un regulated 24 volt leads are connected to the relay and lamp circuits etc. Two milliammeters and a voltmeter are provided on the system and by the operation of an appropriate key, the filament or anode supply voltages, or the filament or anode current of each individual valve may be measured. Relays are connected in the various anode circuits, which on the failure of anode current, will be de-energised and thereby operate an indicating lamp and an audible alarm.

4.4 A block schematic drawing of one terminal of the type T system is shown in Fig. 5 and should be compared with Fig. 3. Several of the component panels differ from the type C in circuit design. These will be referred to later.

5. DESCRIPTION OF OPERATION OF THE TYPE T.

5.1 Transmitter. Voice frequency currents applied at the switchboard pass through relay contacts in the 1000 cycle ringer circuit, 4 m.f. condensers, the 3 db. switching pad (unless switched out) and the 5 db. fixed pad to the hybrid transformer. Here some of the speech power is wasted in the output circuit of the "V.F. Return" amplifier, but some is passed to the modulator. A one-valve "V.F. Go" amplifier has been inserted in front of the modulator on a few only of the early type T systems delivered to

/ the Department.

the Department. On later systems the "V.F. Go" amplifier is not provided.

5.2 The modulator is of the copper oxide rectifier type. The circuit used in this system is shown in Figure 6. The transformer TRD has a third winding XYZ across which a copper oxide rectifier assembly is connected to form a voltage limiter circuit. The voltage limiter operates as follows:-

With no speech input to the circuit, the resistance presented by the rectifiers across winding XYZ of the transformer is high by virtue of the priming voltage from the resistance RUA. Excessive peaks of speech voltage induced into this winding will overcome the priming voltage and the resistance of the rectifiers will be reduced. Thus, in this condition, the voltage limiter functions as a shunted winding of the modulator transformer; XY and YZ being shunted for positive and negative half cycles of speech respectively. This shunt presented to the speech currents prevents excessive levels from reaching the modulator. This is also referred to in para. 9 of Paper 3.

The balanced arrangement of the modulator results in the suppression of the carrier current, and only the side-bands appear in the output of the modulator. The potentiometer P in the modulator circuit enables a refined balance to be obtained.

5.3 The two sidebands are passed from the modulator into the modulator band filter, and here the unwanted side-band is suppressed, and the transmitted side-band passed to the transmitting amplifier where the level of the combined outputs from the three channels is raised to the required value for transmission through the transmitting directional filter, the H.P. filter of the line filter set, and thence to line.

5.4 The transmitting amplifier is shown in Fig. 7. There are two push-pull stages in which inverse feedback is applied. Type M.S.P.4 indirectly heated pentodes are used in the first stage and the output valves are P.X.4 directly heated triodes. The feedback is obtained by taking part of the output of the second stage back to the grid of the valve in the first stage. One side of the feedback circuit may be traced from the anode of valve V9, through condenser QA, the 200,000 resistor, and winding 6-7 of the input transformer to the grid of valve V8. The feedback on the other side may be traced in a similar manner from the anode of V10 to the grid of V7. The amplifier has a maximum available gain of 40 db. and a maximum

/ undistorted

undistorted output of 500 milliwatts. The working gain is fixed for each particular system at the time of installation by the input attenuator. No facilities for day to day adjustments of output level are provided.

5.5 Receiving. Still referring to Fig. 5, we will now trace the progress of the incoming side-band currents received from the distant terminal. Since the frequency of the received currents will fall within the pass range of the receiving directional filter, they will pass through this filter to the line equaliser. The received currents after being equalised, pass to the variable attenuator. This unit is a key controlled attenuator which really functions as the gain control for the receiving amplifier. Day to day variations in the attenuation of the line may be taken up on this unit, and consequently the correct side-band levels maintained for the efficient operation of the demodulator.

5.6 The receiving amplifier is shown in Fig. 8. It is of conventional type with two stages. The first is a single valve, and the second consists of two valves in push-pull. The valves in both stages are type V.T.82. The amplifier has a fixed gain of 81 db. The combined side-band currents are then applied to the three demodulator band filters in parallel. Each demodulator band filter selects its appropriate band and passes it to its particular demodulator. The circuit of the demodulator is shown in Fig. 6, and is similar in form and operation to the modulator circuit. After the unwanted products of demodulation are removed by filtration in the output filter of the demodulator, the original voice frequency appears at the output. This current is passed through a key controlled attenuator designated as the "demodulator output adjust" to the "V.F. Return" amplifier. The demodulator output of individual channels may be adjusted by means of the keys, when variations of the normal level are required to be passed into the V.F. circuit.

5.7 The "V.F. Return" amplifier is a single stage amplifier using a single V.T. 82 valve. The circuit is shown in Fig. 9. This amplifier is necessary to raise the speech currents received from the demodulator to the level necessary to give the required overall attenuation of the channel. The network of resistors, condensers and inductances connected in front of the input transformer, forms an adjustable V.F. equaliser. By setting the tappings on the components at suitable values, the overall attenuation-frequency characteristic of the channel may be adjusted. This is done at the time of installation. The

/ gain

gain of the amplifier is also fixed at that time by the input attenuator. The output of the "V.F. Return" amplifier is fed into the hybrid transformer where some is lost in the balance network, and the remainder is usefully applied to the switchboard via the 5 db., and 3 db. pads and the contacts in the ringer circuit.

5.8 The Modulator and Demodulator Oscillator circuits are identical, and are given in Fig. 10. There are two VT 82 valves, one in the oscillator stage and the second connected as an amplifier. The oscillator is similar to those described for other systems. The arrangement of the oscillator followed by an amplifier gives a high degree of frequency stability as the amplifier and shunted output transformer act as a buffer between the oscillator and any variations of load. The frequency of each demodulator oscillator is carefully synchronised with the oscillator of the corresponding modulator at the transmitting end of the channel.

5.9 The repeater of the type T system is essentially the same as the carrier repeaters previously described for other systems. The directional filters, and equalisers are, of course, designed for the relevant type T frequencies. The repeater amplifiers are identical with the transmitting amplifier. Power requirements are similar to the terminals and are arranged in the same way.

6. TESTING EQUIPMENT FOR THE TYPE T.

6.1 The transmission testing units supplied with the equipment comprise a fixed frequency 800 cycle oscillator, and a level measuring indicator.

6.2 The oscillator unit includes one V.T.82 valve, connected to supply a testing frequency of 800 c.p.s. to four sets of jacks, in such a manner that outputs of 1 m.w. (o db.) - 10 db., -20 db., and -30 db., can be obtained directly from the respective jacks. A neon lamp in series with a 20,000 ohm resistor and a condenser connected across the output of the valve, provide for regulation of the output voltage.

6.3 Level Measuring Indicator. The circuit of the Level Measuring Indicator is shown in Fig. 11. This set enables the power at various points of the carrier equipment to be measured by connecting the jacks at which the measurement is to be made to the Level Indicator jacks with a double ended cord. The scale is calibrated in decibels with respect to 1 m.w., and measurements can be made from -15 db. to +20 db. at frequencies from 0.3 k.c. to 31 k.c. The instrument functions in the

/ following

following manner:-

Alternating potential input to the Level Measuring Indicator is first amplified by valve V.1 which is a V.T.82. The output from this valve is rectified by the copper oxide rectifier assembly and the resulting D.C. potential (or portion thereof) is applied via the potentiometer to the grid circuit of valve V.2 (also a V.T. 82) as a negative grid bias. It will be seen that the anode current of valve V.2 passes through a meter. This meter is calibrated in decibel, on which the levels are read. The increase in negative grid bias will decrease the anode current of valve V.2 by an amount depending on the amplitude of the input of the Level Measuring Indicator, and this input will be indicated in decibel on the meter dial. The potentiometers and the rheostat shown in the circuit are provided to calibrate the level measuring indicator when this is required.

7. VOLTAGE REGULATION.

7.1 The voltage regulator mentioned previously is not an integral part of the carrier system but is proper to the power equipment. However, a "Stone" carbon pile regulator is usually supplied with each type T terminal, and this unit will be described. A diagram showing the elements only of the regulator is shown in Fig. 12, and a schematic circuit diagram is shown in Fig. 13. Referring to these diagrams, the operation will be described.

7.2 It is well known that the resistance of a pile of carbon discs will vary with the pressure between the discs, i.e. the resistance will decrease with increased pressure. In the regulator being described the variable resistance offered by a carbon pile is placed in series with the regulated leads, and the pressure between the discs is controlled automatically by a pivoted lever arrangement fixed to the axis of an electromagnet armature which moves with a rotating action. The winding of the electromagnet is connected in series with a resistor across the load of the regulated supply. Increases of voltage across the load increase the rotating force of the armature against its restoring spring, the lever arrangement reduces the pressure on the discs and so increases the series resistance in the leads. The opposite action takes place for decreases in the voltage across the load. In this way the voltage across the load can be regulated within very close limits.

/ 8.

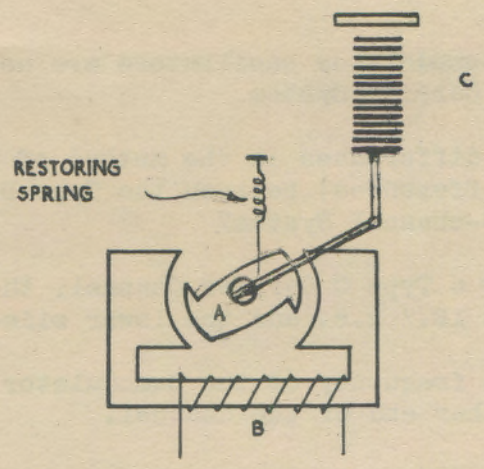

FIG.12.
ELEMENTS OF CARBON PILE VOLTAGE REGULATOR.

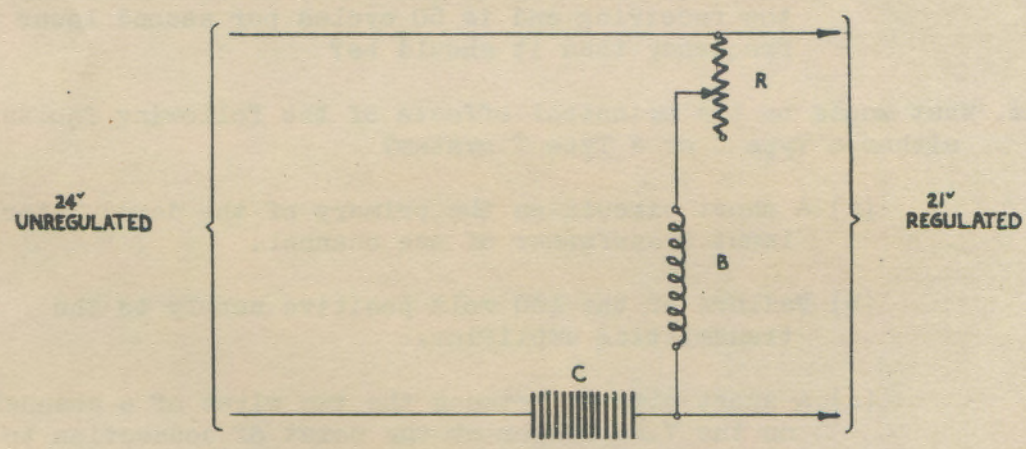

A - ARMATURE
B - REGULATOR EXCITING COIL
C - CARBON PILE
D - LOAD VOLTAGE CALIBRATING RESISTANCE

FIG.13.
SCHEMATIC OF CONNECTIONS.

8. TEST QUESTIONS.

1. Explain why demodulator oscillators are not required on the Type B Telephone Carrier System.

2. What are the differences in the method of filtering (apart from frequency differences) between the Type B Telephone System and the Type C 3-channel System?

3. At one end of a Type C Carrier Channel, the modulator oscillator frequency is 12.7 k.c. and the lower side-band is transmitted. State -

   (a) The frequency of the Demodulator Oscillator at the other end of the channel.

   (b) The frequency transmitted to line if a test tone of 1,000 cycles per second is applied to the switchboard jacks.

   (c) What will be heard in a telephone connected to the switchboard jacks at the other end of the channel?

   (d) What will be heard if the Demodulator Oscillator at the receiving end is 50 cycles per second lower in frequency than it should be?

4. What would be the principal effects of the following faults on either a Type C or a Type T system?

   (a) A short circuit on the primary of the demodulator input transformer of one channel.

   (b) Failure of the 130 volt positive supply to the transmitting amplifier.

   (c) A short circuit between the two wires of a channel on the V.F. ringer at the point of connection to the hybrid transformer.

5. In a Type T System, state the location and the function of the following components -

   (a) Voltage Limiter.
   (b) Demodulator Band Filter.
   (c) Variable Attenuator.

6. What device is used with the Type T system to maintain the filament voltage at a constant value? Describe briefly the operation of this device.

END OF PAPER.

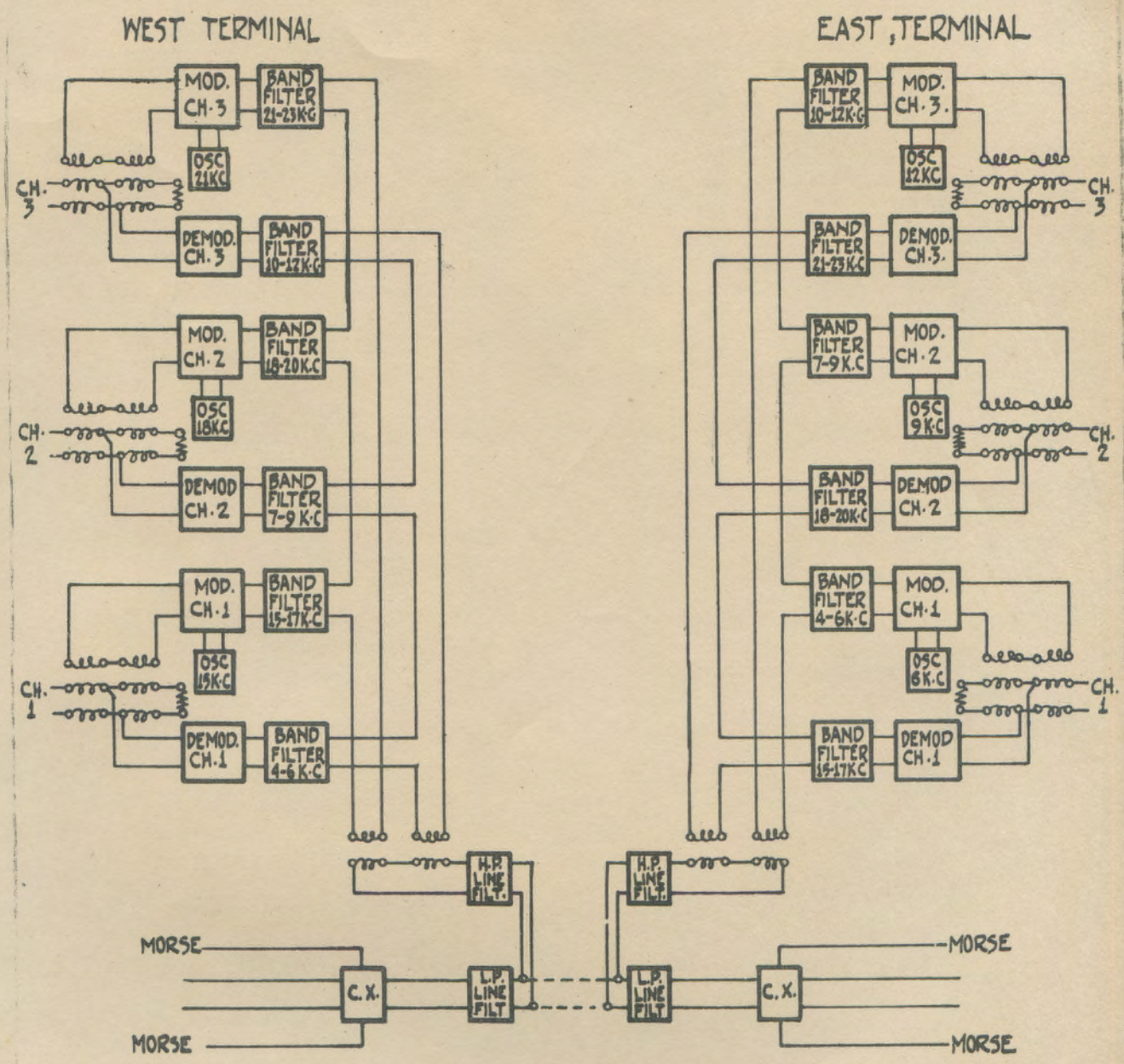

FIG. 1.

TYPE "B" CARRIER TELEPHONE SYSTEM
COMPLETE SYSTEM LAYOUT

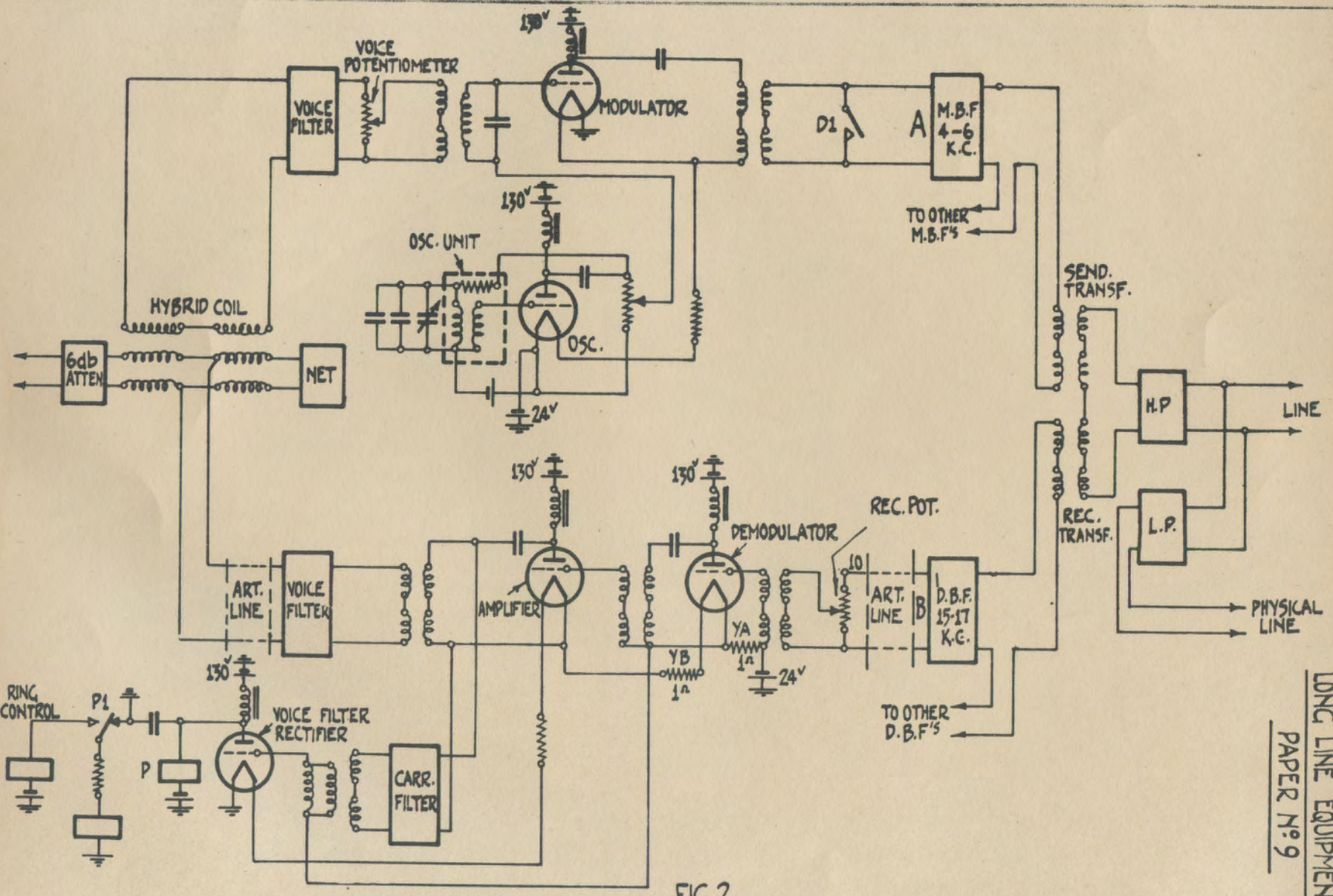

FIG.2

TYPE "B" CARRIER 3 CHANNEL TELEPHONE SYSTEM. (1 CHANNEL SHOWN)

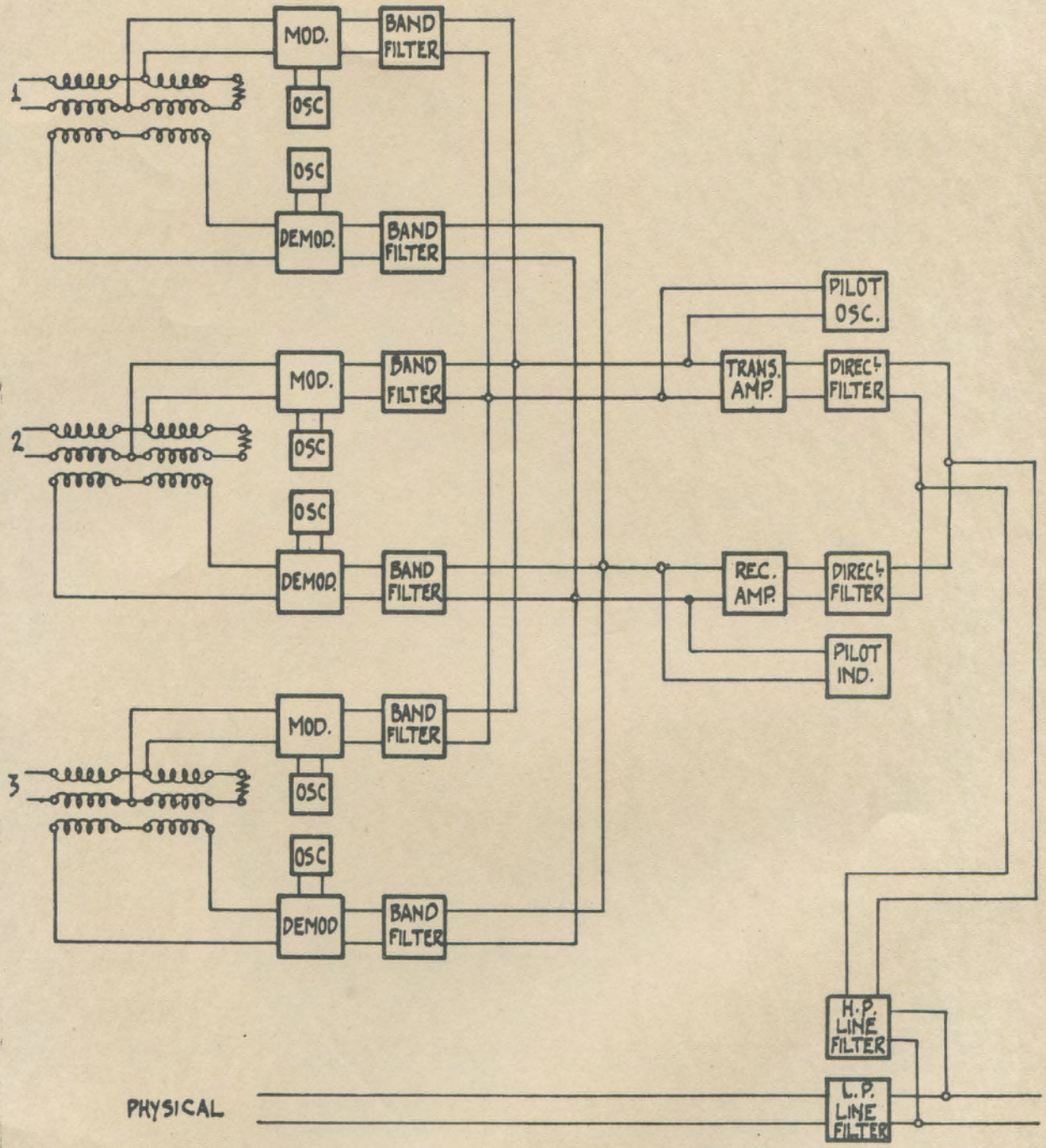

FIG. 3

ONE TERMINAL OF A TYPE "C" CARRIER SYSTEM

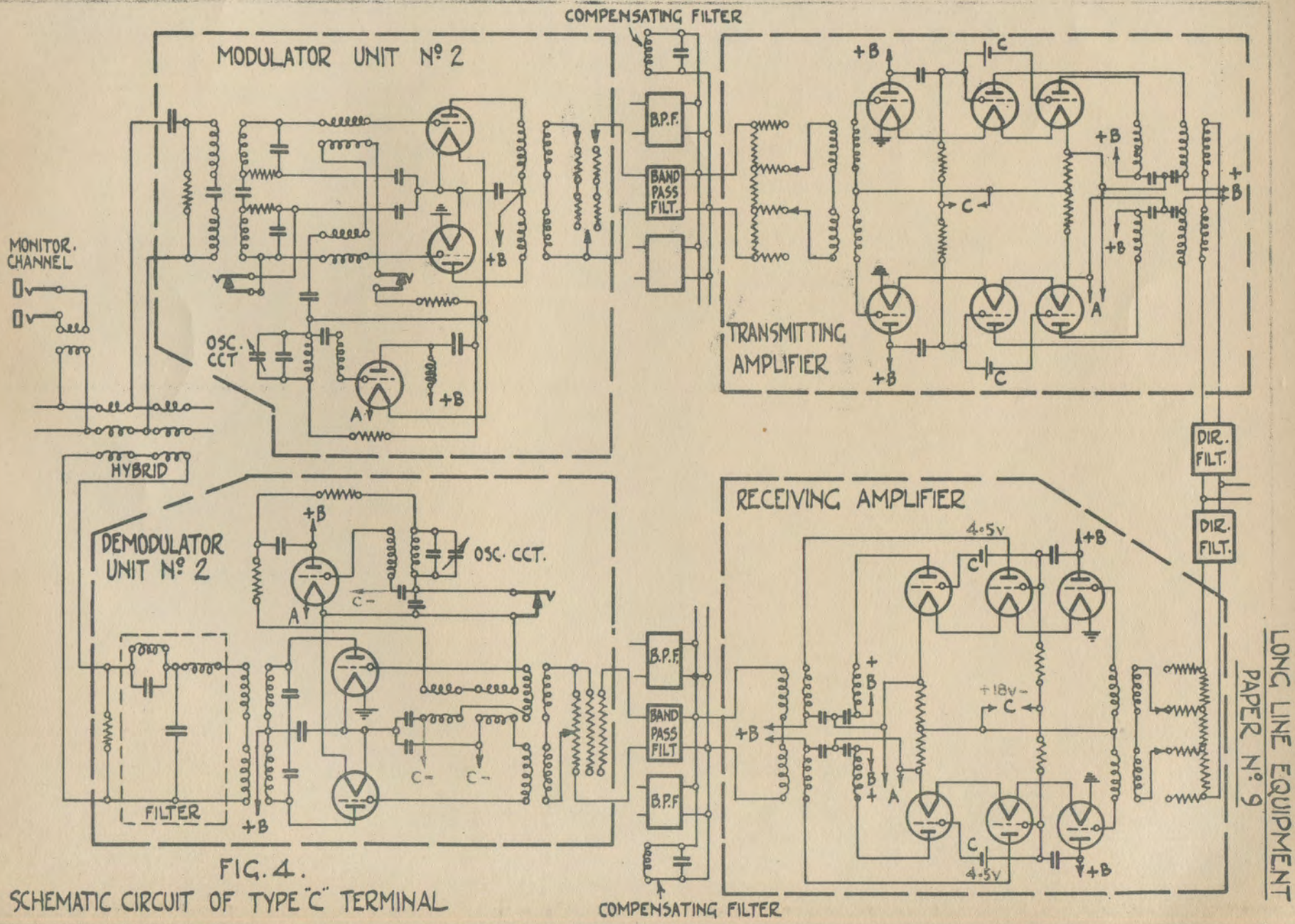

FIG. 4.
SCHEMATIC CIRCUIT OF TYPE "C" TERMINAL

LONG LINE EQUIPMENT
PAPER Nº 9

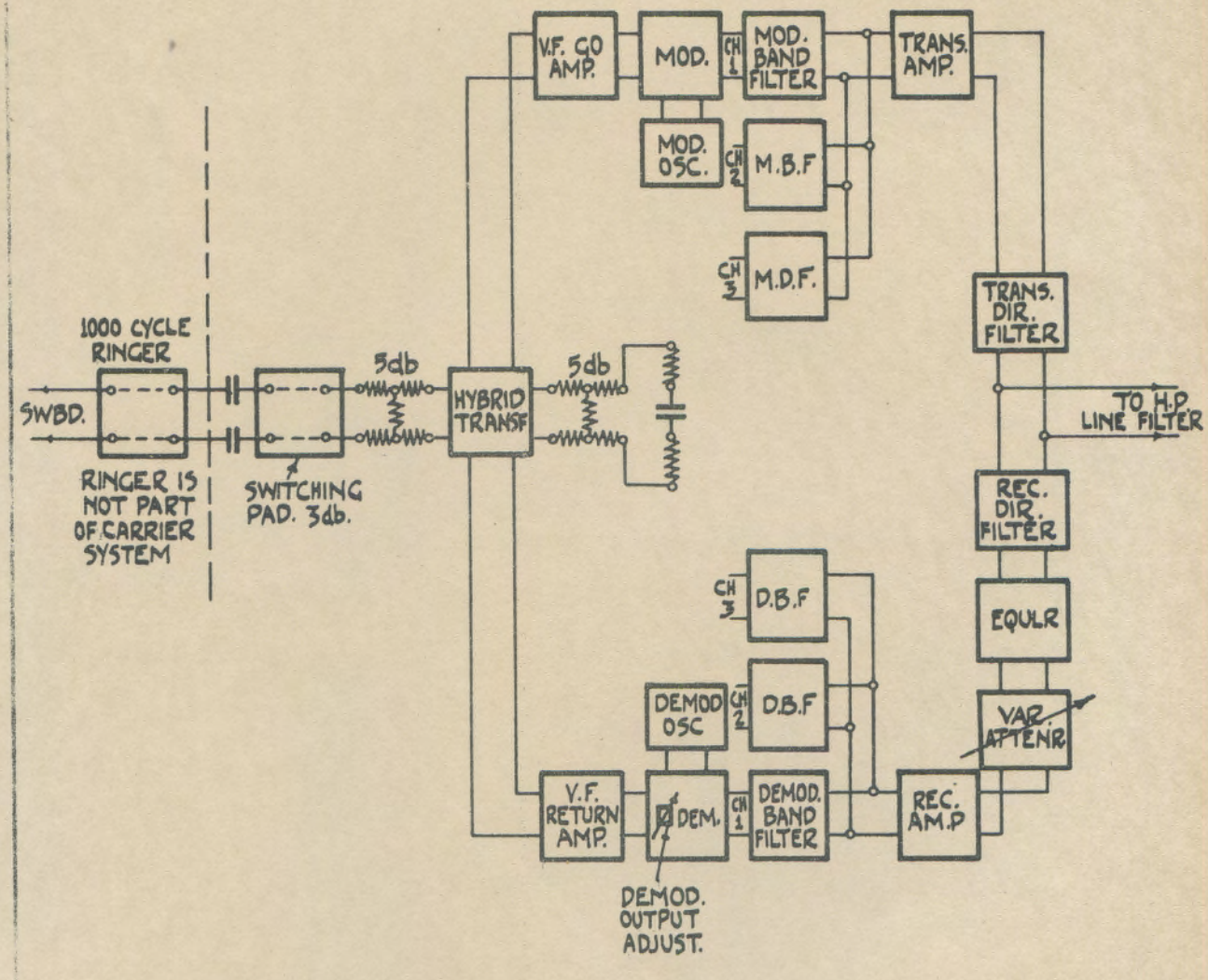

FIG.5.

G.E.C.–TYPE T THREE CHANNEL SYSTEM
TERMINAL EQUIPMENT – BLOCK SCHEMATIC

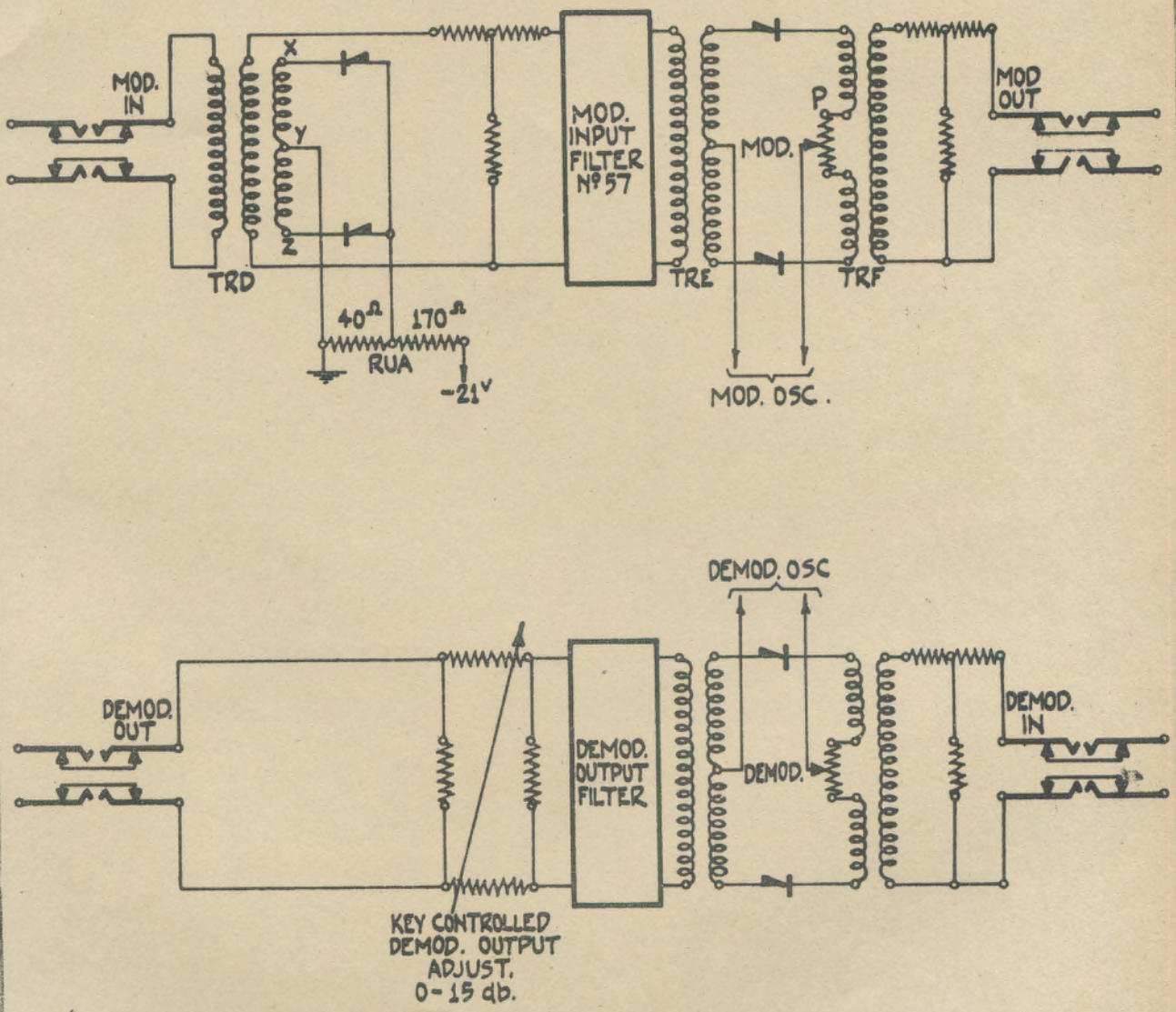

FIG. 6.

G.E.C.-TYPE T 3 CHANNEL SYSTEM
MODULATOR & DEMODULATOR

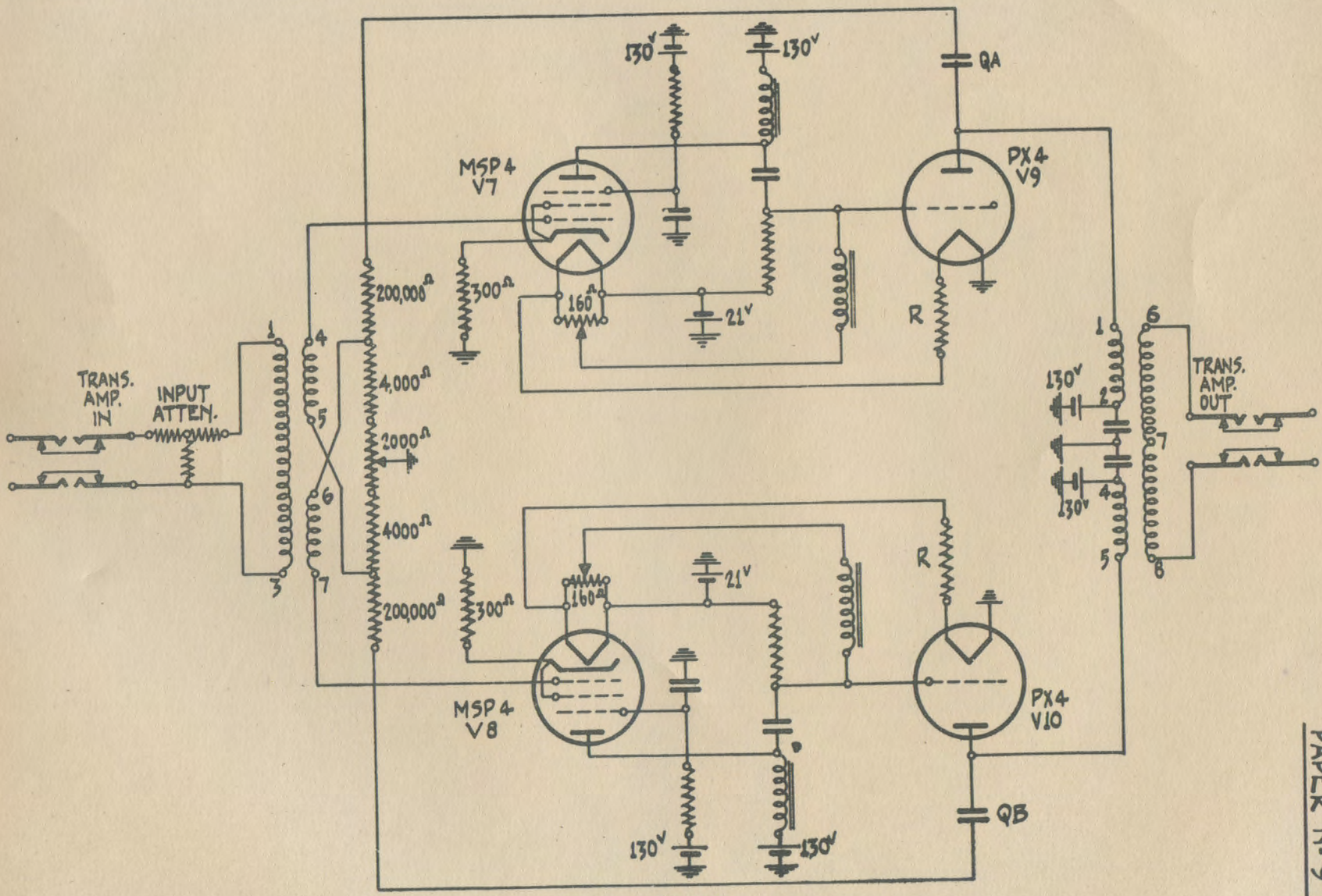

FIG. 7.

G.E.C.- TYPE T 3 CHANNEL CARRIER SYSTEM - TRANSMITTING & REPEATER AMPLIFIER

LONG LINE EQUIPMENT
PAPER Nº 9

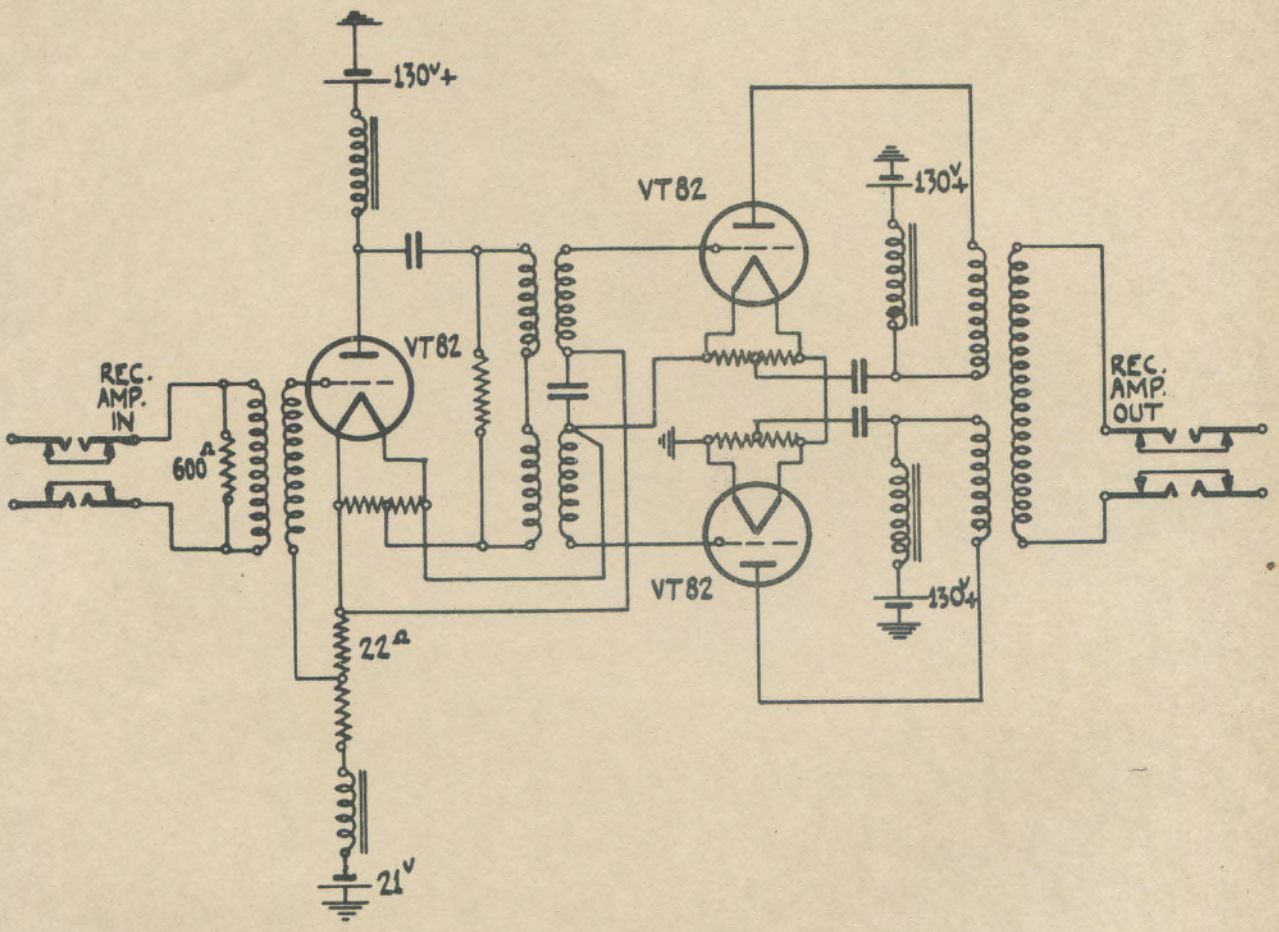

FIG. 8.

C.E.C. TYPE T 3 CHANNEL SYSTEM
RECEIVING AMPLIFIER

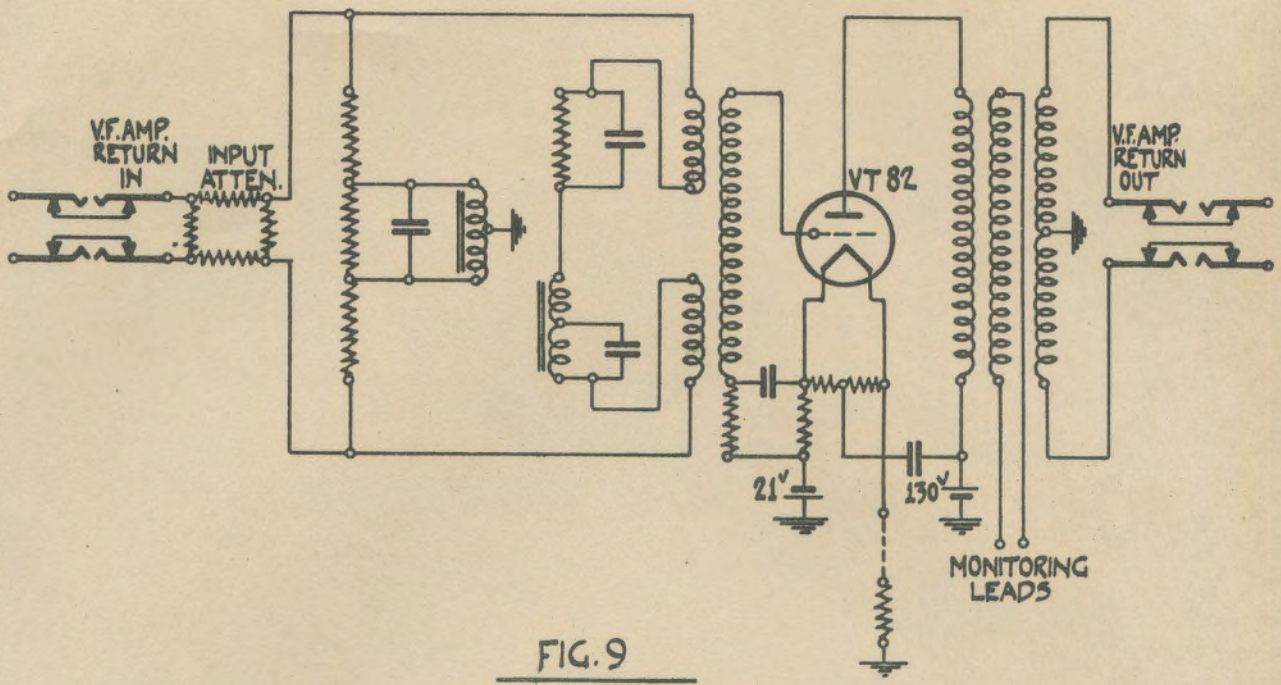

FIG. 9

"V.F. RETURN" AMPLIFIER

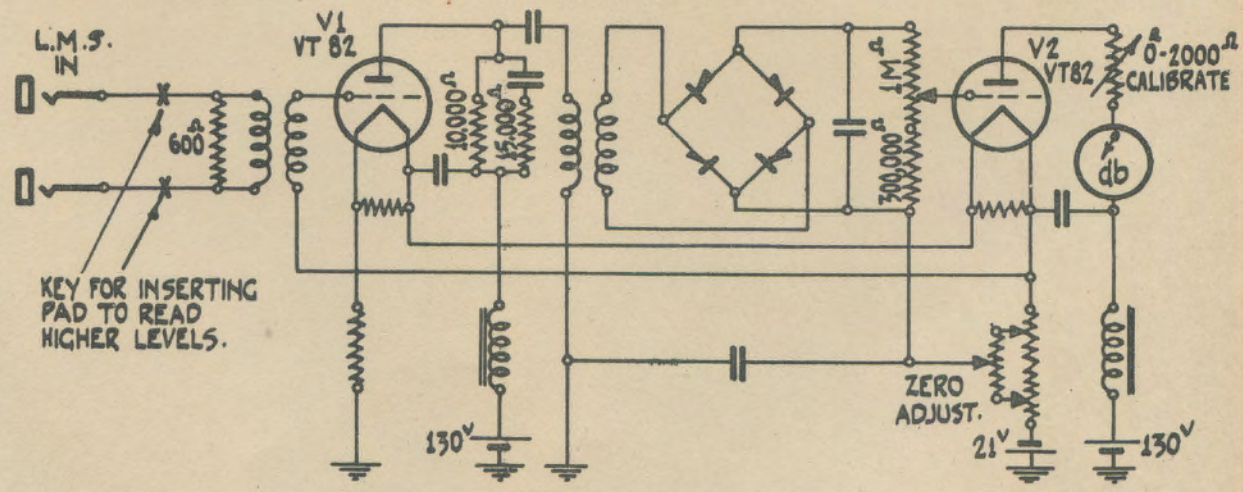

FIG. 11

LEVEL MEASURING SET

G.E.C. TYPE T 3 CHANNEL SYSTEM

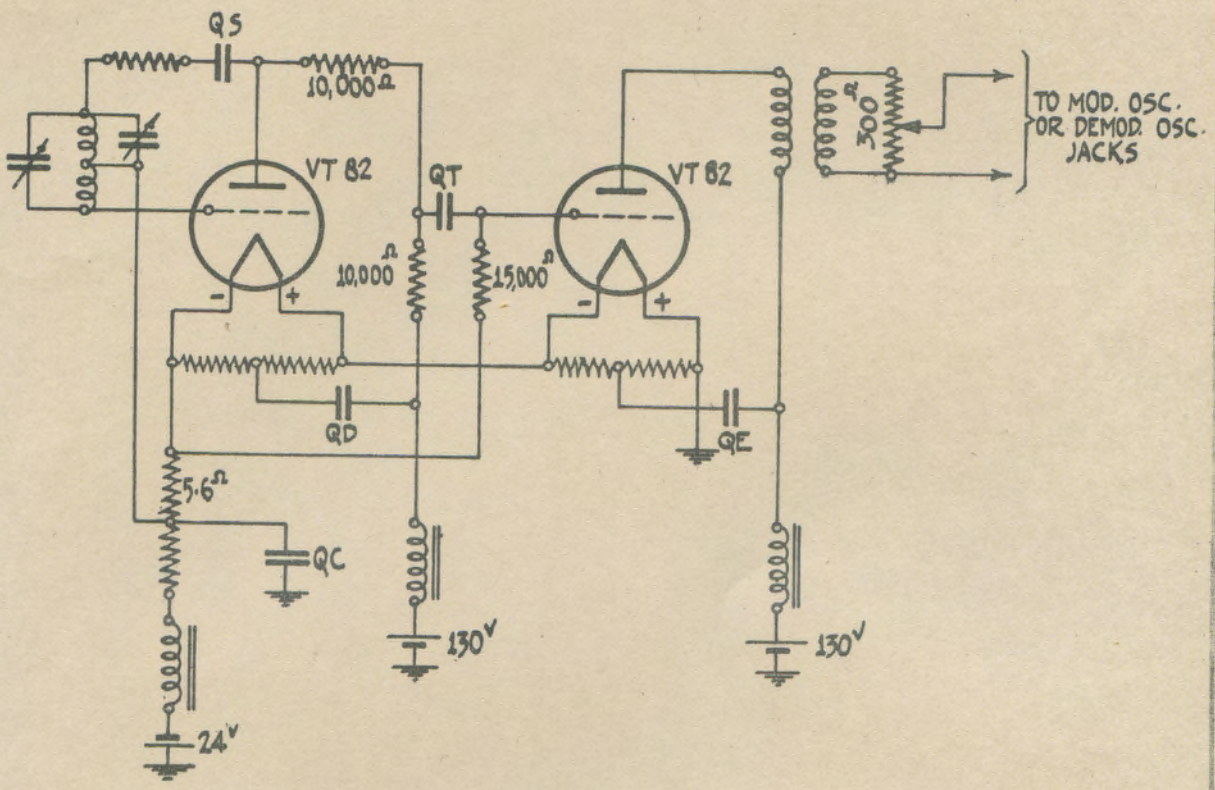

FIG. 10

TYPE "T" G.E.C. 3 CHANNEL SYSTEM
MODULATOR OSCILLATOR & DEMODULATOR OSCILLATOR

COMMONWEALTH OF AUSTRALIA.

Chief Engineer's Branch,
Postmaster-General's Department,
Treasury Gardens,
Melbourne, C.2.

COURSE OF TECHNICAL INSTRUCTION.

LONG LINE EQUIPMENT.

CONTENTS:

1. PROGRAMME TRANSMISSION.
2. FREQUENCY BAND TO BE TRANSMITTED.
3. FREQUENCY RESPONSE.
4. NON-LINEAR DISTORTION.
5. NOISE.
6. LINE AMPLIFIERS.
7. PROGRAMME BRANCHING.
8. EQUALISERS.
9. SUPERVISORY EQUIPMENT.
10. POWER SUPPLY.
11. TEST QUESTIONS.

1. PROGRAMME TRANSMISSION.

1.1 General. An important use of the trunk line network is the interconnection of studios, or the connection of studios to stations for the transmission of programmes to be used for broadcasting.

1.2 The basic requirement of a circuit for the satisfactory transmission of a programme is that it shall give naturalness of reproduction. A telephone channel is required for the transmission of information and, so long as the circuit provides satisfactory intelligibility, it achieves all that is necessary. This naturalness that is required in a channel used for the transmission of programmes for broadcasting involves a number of different requirements which must be met by such a channel, and these are set out in later paragraphs.

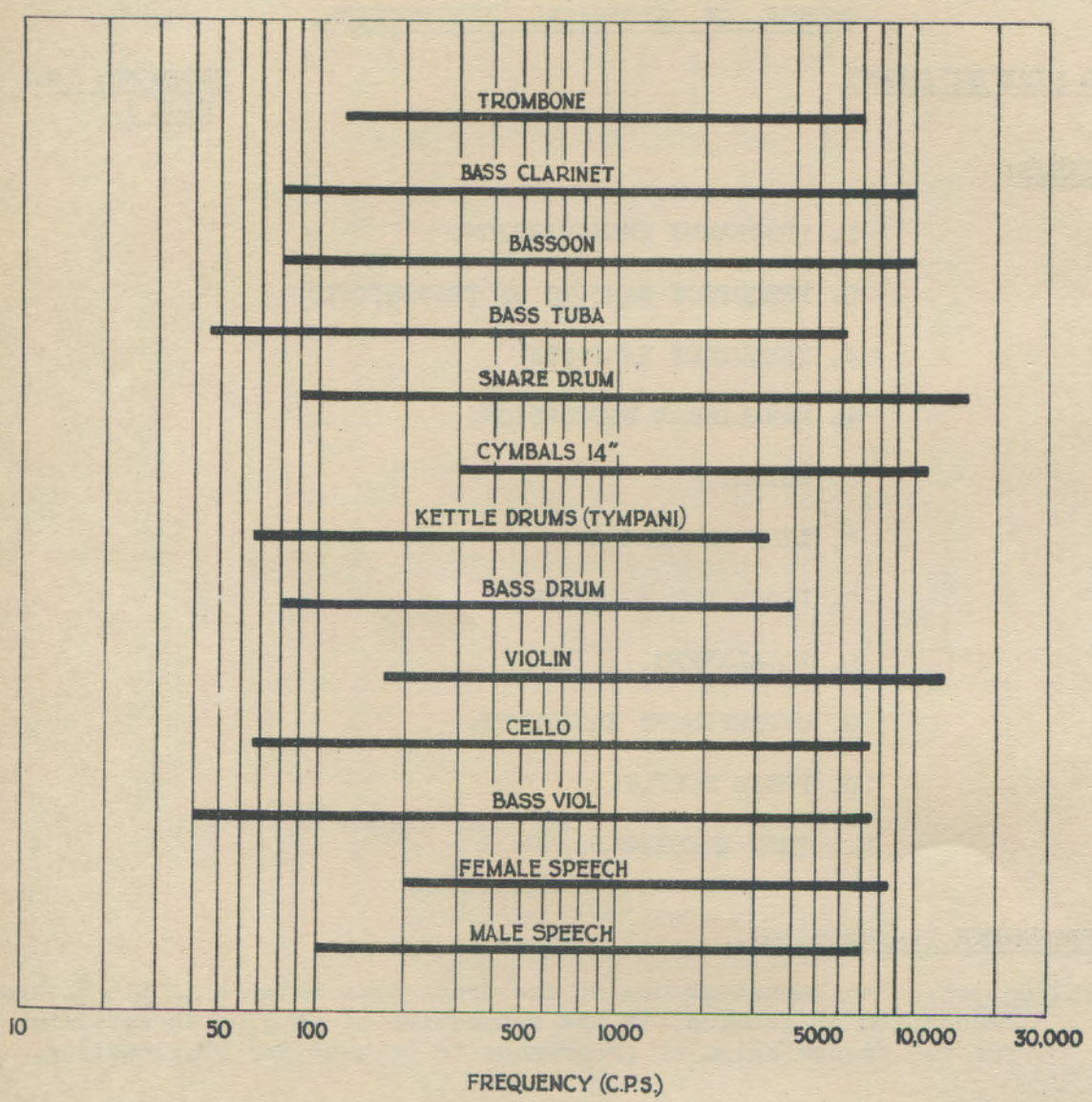

RANGE OF MUSICAL INSTRUMENTS.

(Reduction of range beyond limits shown is detected by most listeners.)

FIG. 1.

1.3 The circuits are invariably set up on a unidirectional basis, and this simplifies the problem somewhat by eliminating the danger of singing and enabling the line up of the channels to a zero equivalent. This, in turn, simplifies the problem of interconnecting a number of channels to form a complex network, as several channels may be connected in tandem without change in programme level.

1.4 Where the demand exists, permanent programme lines are established either as physical or carrier channels. In other cases, physical trunk lines are adapted by replacing the ordinary telephone equipment by programme equipment.

1.5 Owing to the necessity for freedom from interruption and the demand for a high quality service, the set-up of these channels is entirely in the hands of the technical staff and is carried out usually at the trunk test panels associated with trunk exchanges.

2. FREQUENCY BAND TO BE TRANSMITTED.

2.1 Fig. 1 opposite shows the audio frequencies produced by musical instruments and, to ensure accurate reproduction of such instruments over the programme channel, it would be necessary to transmit an audio frequency band width from approximately 20 to 15,000 cycles per second.

2.2 Experience has shown, however, that a reasonably satisfactory result can be obtained by providing channels which transmit frequencies from 35 cycles per second to 5,000 cycles per second. When a direct comparison is made, however, there is definite improvement by increasing the transmitted band to 7,500 cycles per second and a less noticeable improvement by continuing the transmitted band to 10,000 cycles per second, when very little further difference is noticeable.

2.3 Due to the use of carrier telephone equipment of the CS3 or CT4 type, which must be operated on the same lines, it is frequently impossible to transmit frequencies higher than approximately 5,000 cycles - such a channel, however, still provides quite good quality. This 5,000 cycle channel is obtained by replacing the ordinary high and low pass filters (which have a cut-off frequency of approximately 3 k.c.) associated with carrier working with special filters having a cut-off about 5.6 kilocycles. Certain types of carrier systems, such as the single channel Types D and F and the 3-Channel C2N, work at frequencies lower than the CS3 and CT4 mentioned above, and, therefore, use filters cutting off the voice-frequency channel from the carrier channels at approximately 3 k.c. per second. It will be seen that the physical circuits on wires carrying such systems are unsuitable for programme transmission purposes.

/ 2.4

2.4 On an ordinary speech channel, satisfactory intelligibility is reached when the channel used transmits the frequency band from 250 cycles per second to 2,700 cycles per second, and carrier channels, voice-frequency channels, loaded cables, etc., are frequently designed on such a basis. It will be seen, therefore, that a telephone channel designed to provide intelligibility is unsuitable for music transmission where naturalness is required.

2.5 Programme channels are also provided over specially designed carrier telephone systems. These carrier systems occupy part of the frequency band above the ordinary 3-channel carrier telephone system, and provide for an audio band width from 35 cycles per second to 7,500 cycles per second. Further details are given in Paper No. 11.

3. FREQUENCY RESPONSE.

3.1 It is essential that all frequencies in the required band be transmitted with equal efficiency, so that the balance between instruments and the relative levels of the components of a chord or sequence of notes remains unchanged due to the introduction of the programme channel, i.e., the attenuation of the channel must be substantially independent of frequency.

3.2 The attenuation frequency characteristic (response) is measured by sending constant level tone into the channel and changing the frequency in steps to cover the required range, while the received level is measured at the far end. The variation in this received level should be as little as possible within the limits of the frequency band to be transmitted, and should never be greater than 5 db.

3.3 It should be noted that the practice of connecting a number of channels in tandem greatly increases the difficulty of obtaining satisfactory overall frequency response, as the variations of the individual channels will be additive.

4. NON-LINEAR DISTORTION.

4.1 Considering the fundamental requirement that the complex wave corresponding to the programme be unchanged, it follows that the channel must not generate extraneous frequencies.

4.2 If the ratio of input to output voltage is other than a straight line for the complete range of level and of frequency to be transmitted, the application of a pure single frequency tone (sine wave) to the input of the channel may result in the presence of spurious harmonics as well as the original fundamental frequency at the output. This is known as "non-linear" distortion.

4.3 If now two pure tones be applied simultaneously to the input, as well as harmonics of each, there may be produced inter-modulation tones having frequencies equal to the sum and difference of the two fundamentals. Further, more complex tones may also be

/ produced

produced made up from sums or differences of various multiples of the two fundamentals.

4.4 From the point of view of a listener, probably the inter-modulation products are the most annoying distortion components, but since they are caused by the same trouble as the harmonics (i.e. non-linear input-output characteristic of the channel) it is usual in specifying equipment and making distortion measurements, to deal with harmonics of a pure input only. The R.M.S. value of harmonics should never be greater than 4% of the R.M.S. value of the complex output, but much lower values are obtained with well designed equipment.

4.5 As was seen in the Paper on amplifiers, triode valves such as are generally used for programme transmission purposes are operated on the straight part of the characteristic curve and the harmonic distortion is then very low. If, however, the tubes are driven on to the curved part, the percentage of harmonics rises rapidly, second harmonics being usually associated with the plate circuit and third harmonics with the grid circuit, while other components such as transformers and chokes similarly cause distortion when overloaded. It follows that in operating programme equipment care must be taken to ensure that the programme level, particularly during loud passages, is kept below the overload point of equipment in the transmission circuit.

4.6 Another effect of overloading is to reduce the gain of the amplifier and hence the ratio between soft and loud passages of music is not maintained. This provides a ready means of checking the performance of a channel by graphing the input level versus output level over a range of increasing inputs; within the limits of operation this graph should be a straight line.

5. NOISE.

5.1 To ensure exact reproduction of a musical programme, it is desirable to handle a very wide range of volumes. The upper limit is, of course, the overload point of the equipment, and the lower limit is determined by the level of noise.

5.2 From experience it has been shown desirable to transmit a range of volumes, referred to as the dynamic range, of approximately 40 db., and thus to maintain a reasonable noise margin the noise level should be, say, 50 db. below the peak value.

5.3 The human ear is not independent of frequency, being particularly sensitive to frequencies of the order of 1000 to 3000 cycles per second and it thus follows that a noise containing these frequencies is more objectionable than a noise of frequency, say 50 cycles per second. Thus a measurement of the actual noise voltage or level is not entirely

/ satisfactory

satisfactory as a means for determining the interference level.

5.4 To compensate for this effect, noise measurements are made with a "weighting" network connected in front of the level indicator. This weighting network has higher attenuation at the less objectionable frequencies than for frequencies to which the ear is very sensitive, and thus the level indicator reads low for such frequencies and gives a better measure of the interference caused.

5.5 A curve giving the attenuation voice frequency characteristic of a network used for programme transmission channels is shown in Fig. 2.

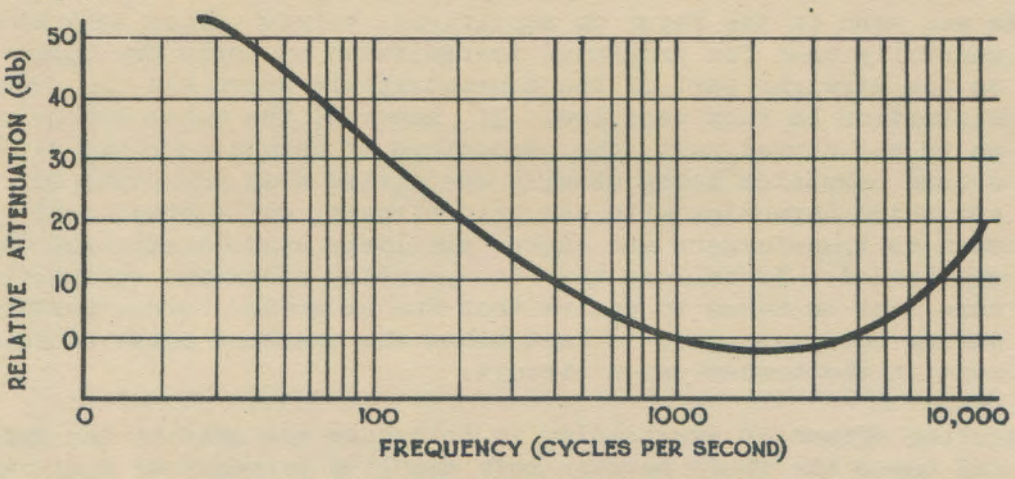

PROGRAMME TRANSMISSION EQUIPMENT.

FIG. 2.

The following paragraphs refer to the equipment in use in the Department for the transmission of programmes. In another Paper, there is a description of the Programme Carrier System, which may be regarded for the moment as a link for, from the operation point of view, it is handled exactly as an audio-frequency circuit.

6. LINE AMPLIFIERS.

6.1 In order to provide for the zero equivalent mentioned above, amplifiers are necessary. To ensure that the programme level is maintained above the inherent noise level of the line, amplifier installations are set up from point to point along the longer routes, the spacing being as for repeater stations.

6.2 Many different types of amplifier are in use for this purpose, but reference to Fig. 3 will show the schematic circuit of a typical amplifier of modern design. The amplifier is designed to operate

/ between

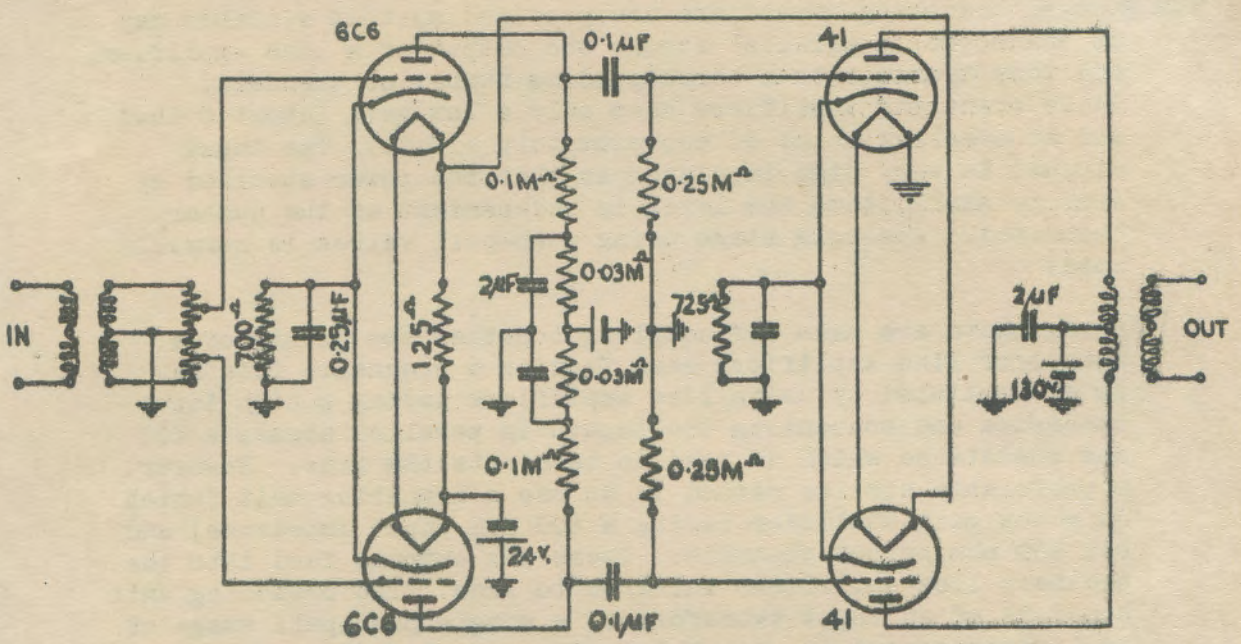

FIG. 3.
PROGRAMME LINE AMPLIFIER

between impedances of 600 ohms (approximately the impedance of a standard uniform line), has a gain of 30 db. variable in steps of 2 db, an overload point about +16 db. referred to 6 milliwatts as zero, and during line-up is adjusted so that zero equivalent is maintained from input to the channel to the amplifier output.

6.3 Features of the amplifier which should be noted are the use of push-pull to eliminate second harmonic distortion, the use of resistance coupling, and the use of triodes with their inherent low distortion components.

6.4 Measured results on an amplifier such as that shown gave a response characteristic within ± .5db. from 35 to 10,000 cycles.

6.5 Amplifiers employing pentode thermionic valves and providing for the use of "feed-back" are also being introduced into the programme network. Amplifiers of such design have the advantage of giving low harmonic distortion.

7. PROGRAMME BRANCHING.

7.1 It is frequently required to split a single incoming programme to a number of outgoing channels, which may be either trunk lines or short junctions to the studios of the broadcasting companies. Two methods are in general use.

/ 7.2

7.2 Special branching amplifiers are provided so that a number may be connected in parallel across the output of a line amplifier, and thus transmit to a corresponding number of channels. These branching amplifiers have only a low gain (about 5 db.) and an overload point of approximately +16 db. The input circuit is very high impedance so that the power absorbed by each is small, thus the level is independent of the number connected. A single stage using push-pull valves is normally used.

7.3 Arrangements are made for coupling together the inputs of a number of line amplifiers each feeding a channel. This may be accomplished by using line amplifiers having a high input impedance and connecting the inputs in parallel across a 600 ohm resistance which is used to terminate the line. However, a preferable similar method is to use a branching unit (which is a low gain amplifier having a 600 ohm input impedance) and six 600 ohm output channels. These six outputs feed into the ordinary line amplifiers and then to line. The branching unit consists of an input transformer, a single push-pull stage of amplification and an output transformer, which works into six 5 db. pads in parallel to provide the required outputs (see Fig. 4).

7.4 The method to be adopted depends on local circumstances. In general, where the usual function of the amplifier station in question is to amplify a number of programmes, method (2) is used, whereas if branching is required, method (1) is to be preferred on the ground of cost.

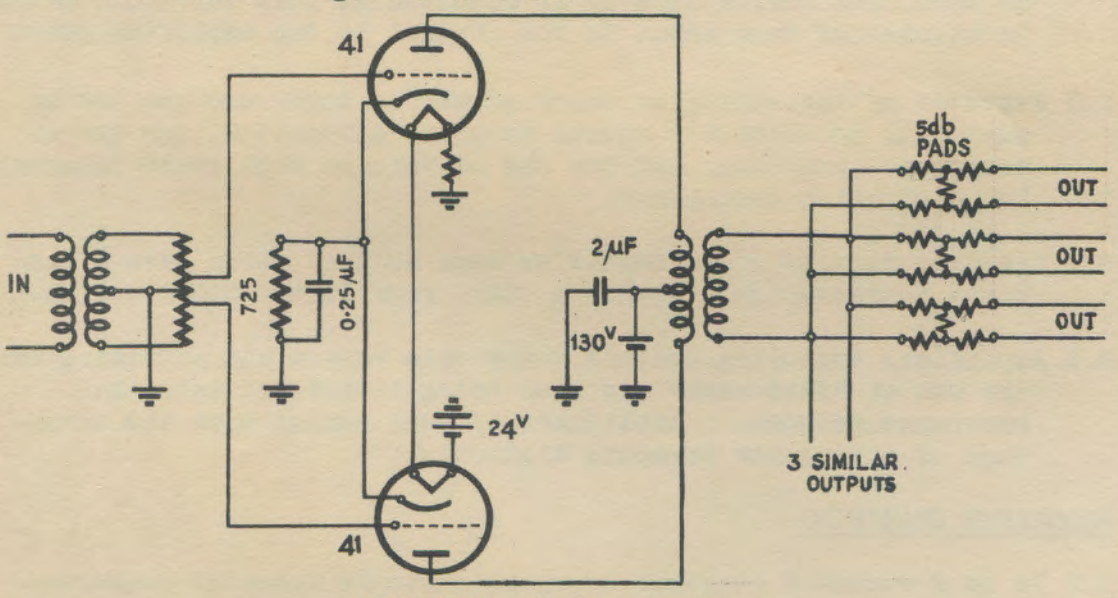

PROGRAMME BRANCHING UNIT.

FIG. 4.

/ 7.5

7.5 It should be noted that this branching requirement frequently involves the introduction of amplifiers into the transmission circuit, even when the line is very short and amplification is not required for normal straight-through working.

7.6 A block schematic circuit, showing the method of branching discussed in paragraph 7.2, is given in Fig. 6 and should be compared with the arrangements made for a straight-through amplifier station given in Fig. 7.

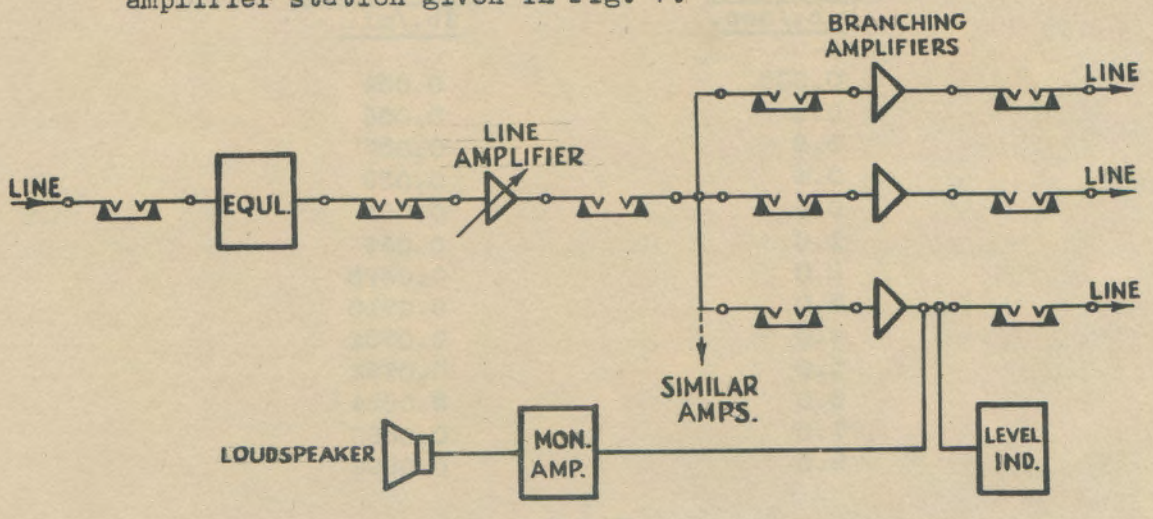

PROGRAMME TRANSMISSION APPARATUS.
TERMINAL BRANCHING INSTALLATION.

FIG. 6.

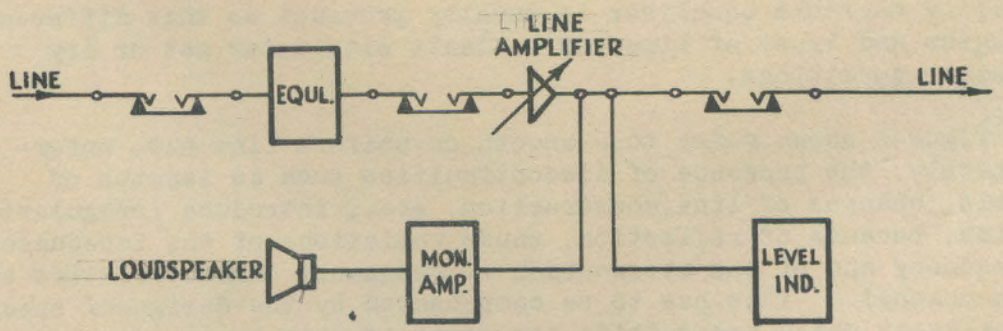

PROGRAMME TRANSMISSION APPARATUS.

INTERMEDIATE STATION.

FIG. 7.

8. EQUALISERS.

8.1 These have been dealt with in the papers on carrier working and are here described in relation to the wider programme requirements. The attenuation of a line rises with increase in frequency as shown in Table A, which gives the figures for a 200 lb. hard drawn copper line of 14" spacing between wires on the pole route.

Frequency k.c./sec.	Attenuation db./ml.
0.035	0.054
0.1	0.056
0.2	0.057
0.4	0.059
0.6	0.061
1.0	0.064
2.0	0.0675
3.0	0.0710
4.0	0.0752
5.0	0.0792
6.0	0.0824
7.0	0.0860
8.0	0.0898

TABLE A.

8.2 To secure a uniform response characteristic, each repeater station is provided with an equaliser having a characteristic curve complementary to the line, i.e. with attenuation decreasing with increasing frequency. Fig. 5, attached, shows the characteristics of a line 100 mls. in length of 200 lb. H.D.C. and the curve of the equaliser which would have to be provided for such a channel; a variable equaliser is usually provided so that different lengths and types of line can be dealt with under wet or dry weather conditions.

8.3 The figures shown refer to a smooth or uniform line but, unfortunately, the presence of discontinuities such as lengths of cable, changes of line construction, etc., introduce irregularities which, because of reflection, cause variations of the impedance v. frequency and of the attenuation v. frequency characteristics of the channel. This has to be compensated by the design of special equalisers which are outside the scope of this course.

8.4 The equaliser is normally used at the low level end of the line or section of line for which it is designed, and is connected in circuit in front of the line amplifier. Two types are in general use:-

/ 8.5

8.5 The constant impedance equaliser, which may be connected between the line and amplifier without affecting the impedance relationship. The equaliser may be either fixed or variable in characteristic.

8.6 The shunt equaliser, which is connected across the line. This equaliser, being in shunt across the transmission circuit, affects the impedance relationship, and is less satisfactory than that mentioned above; it is, however, cheap and widely used, particularly for short temporary programme transmission lines such as those used for connecting outside broadcast points, (such as racecourses) to studios.

9. SUPERVISORY EQUIPMENT.

9.1 To provide for setting up and observation of programmes, it is usual to supply at each amplifier (repeater) station a loud-speaker, monitoring amplifier and level indicator. These two latter have a high impedance input so that they can be connected across the transmission channel without appreciably affecting the programme level.

9.2 The level indicator is a voltmeter calibrated to read levels in decibel referred to 6 milliwatts, and incorporates an amplifier so that low levels may be shown. The meter movement is of a high speed type so that programme peaks may be observed to ensure that such peaks are not exceeding the overload point of the equipment.

9.3 The monitoring amplifier is required to have a gain of approximately 40 db. and an output power of about 3 watts to drive the loud speaker. Many types are in use and as, in principle, they are generally similar to the line amplifier, no further description will be given at this stage.

10. POWER SUPPLY.

10.1 It should be noted that programme transmission equipment is designed, except in special cases, to operate from 24 Volt and 130 Volt batteries, the positive side of the 24 Volt and the negative side of the 130 Volt being earthed as is standard practice for voice frequency repeater and carrier operation. This is to avoid risk of interruption to the programme channel in the event of failure of the commercial supply. An exception to this will be the monitoring amplifier, where the high power output renders battery operation difficult, but as this unit is not in the transmission circuit its failure does not mean interruption.

/ 10.2

10.2 Choke coils are included in the battery supply leads to reduce the risk of crosstalk between amplifiers, and meters are provided so that filament and plate currents can be read to ensure that the equipment is in satisfactory condition. Fuses of the alarm type are also provided in the 24 volt circuit.

11. TEST QUESTIONS.

1. Why is a wider band of audio frequencies required for the transmission of a music programme as compared with that required for telephone conversation?

2. What is the effect of overloading an amplifier of the type normally used on programme channels?

3. In specifying amplifiers for use on programme channels, consideration is given to, among other things, the frequency response, gain and overload point. Give figures showing typical values.

4. What is meant by the dynamic range of a programme and what factors limit this range?

5. Draw a block schematic circuit showing equipment which would be used for splitting a single programme to five outgoing channels.

6. Why are equalisers used on programme channels? Draw a curve showing the attenuation frequency characteristic of an equaliser which would be suitable for a line having the following characteristic:-

Freq. cycles/sec.	50	100	500	1000	3000	5000
Atten. (db.)	4.8	4.9	5.2	5.6	6.2	6.9

END OF PAPER.

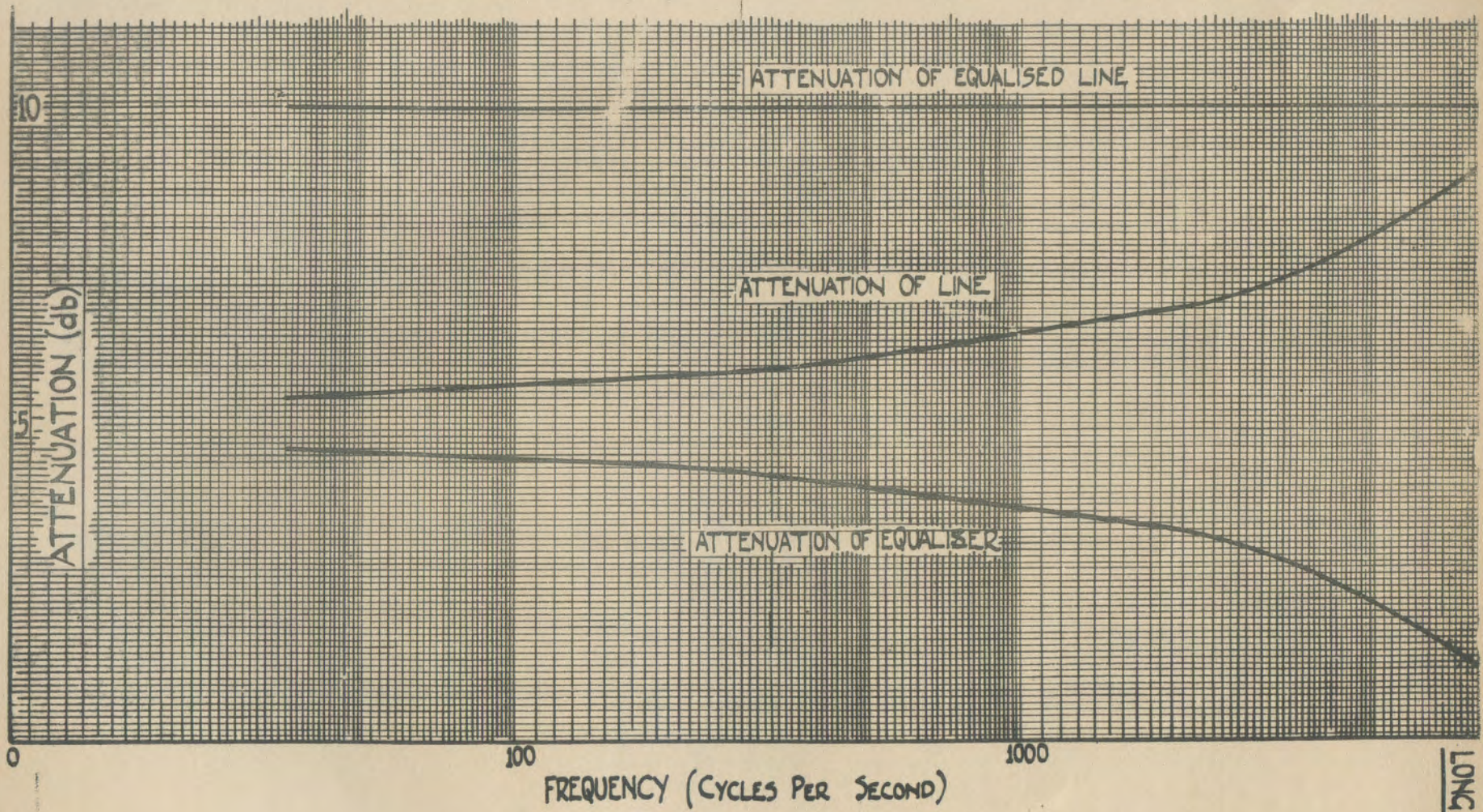

FIG. 5

EQUALISER FOR 100 MILES OF 200 lb. H.D.C. LINE .14" SPACING

COMMONWEALTH OF AUSTRALIA.

Chief Engineer's Branch,
Postmaster-General's Department,
Treasury Gardens,
Melbourne. C.2.

COURSE OF TECHNICAL INSTRUCTION.

LONG LINE EQUIPMENT.

CONTENTS:

1. CARRIER SYSTEM FOR PROGRAMME TRANSMISSION.

2. GENERAL DESCRIPTION OF SYSTEM.

3. SYNCHRONISM.

4. THE UNWANTED SIDEBAND.

5. TRANSMITTING TERMINAL.

6. RECEIVING TERMINAL.

7. REPEATERS.

8. DEMODULATING REPEATER.

9. TEST QUESTIONS.

1. CARRIER SYSTEM FOR PROGRAMME TRANSMISSION.

1.1 At the present time the only system in use in the Commonwealth of Australia is that manufactured by Standard Telephones and Cables, and this system is described.

1.2 The requirements of a carrier system for the transmission of programmes differ somewhat from those of an ordinary telephone system in that a very much higher standard of quality is required. This means that the voice frequency band transmitted is to be much wider, distortion due to non-linear effects must be kept to a minimum, and the level of extraneous noises must be extremely low.

1.3 The systems are unidirectional, thus eliminating any difficulties as regards singing, but are in general capable of fairly rapid reversal. This absence of singing troubles enables the channel to be lined up to quite low equivalents, and the system to be discussed hereunder

/ provides

provides for a 6 db overall equivalent. To obtain the feature of reversibility, much of the equipment used in the transmitting and in the receiving terminals is common, and changing from one condition to the other is accomplished by key switching.

2. GENERAL DESCRIPTION OF SYSTEM.

2.1 The system is designed to transmit a voice frequency band extending from 35 to 7,500 cycles per second over line sections not exceeding 40 db under wet weather conditions. This figure provides for the use of repeaters at the same spacing as is adopted in the 3-channel systems.

2.2 The system is a suppressed carrier single side-band, using a carrier frequency of 42.5 k.c. and transmitting the lower side-band. Thus, the carrier frequencies involved are from 35 k.c. corresponding to an audio-frequency of 7.5 k.c. to 42.5 k.c.

2.3 To enable the system to be operated on the same wires as 3-channel systems, special high and low pass filters are provided, having cut-off frequencies of 32.4 k.c. and 31.9 k.c. respectively. These filters are connected between the ordinary line high and low pass filters and the programme terminal.

2.4 The equipment is mounted on standard racks 20-1/4" wide and 10'6" in height, a combined transmitting and receiving terminal (see below) occupying two such racks. Power supply equipment such as meters, fuses, ballast lamps and choke coils are mounted on the same racks as is also the measuring equipment used for routine tests and lining-up of the channel.

3. SYNCHRONISM.

3.1 In ordinary carrier systems using the suppressed carrier system, it is the practice to use separate oscillators at the transmitting and receiving terminals, and to synchronise these oscillators periodically, but where it is necessary to transmit very low voice frequencies, (say, about 35 cycles) even a very small difference in carrier frequency gives rise to distortion. In the system under discussion special arrangements are, therefore, made for synchronising the receiving terminal with the transmitting terminal.

3.2 At each terminal there is provided a carrier oscillator which is designed to operate at 42.5 k.c. but which is capable of operating at frequencies approximately $\pm$ 100 cycles from this point. At the transmitting terminal is also a pilot oscillator which is extremely stable, and which operates at 34 kc. It will be noted that there is a ratio of 4:5 between the pilot and carrier frequencies. This pilot frequency is injected into the grid

/ circuit

circuit of the carrier oscillator, and holds it in synchronism in this 4 : 5 ratio, thus providing an exact 42.5 k.c.

3.3 To synchronise the far terminal, the pilot is transmitted over the line and injected into the grid circuit of the receiving terminal carrier oscillator. Thus, the two carrier oscillators are held in exact synchronism by use of the common pilot frequency.

3.4 The pilot frequency also serves a second purpose by being tapped off at each repeater station through a circuit tuned to 34 k.c. This pilot frequency is then used to operate a pilot indicator which provides a ready check on change in attenuation along the line. If the line attenuation changes due to weather conditions, the pilot level will change and the pilot indicator at the receiving terminal will operate a relay circuit to ring an alarm bell. Adjustment of the gain of repeaters is then made to restore the line equivalent to normal.

4. THE UNWANTED SIDEBAND.

4.1 Since the two sidebands corresponding to low voice frequencies (say, 35 cycles) are only 70 cycles apart, their separation presents considerable difficulty and cannot be effected with normal filters composed of coils and condensers. As the presence of unwanted upper sideband introduces distortion, special measures are adopted to eliminate it.

4.2 To this end, a crystal filter is provided, this filter being actually a two-stage amplifier with a quartz crystal between the two stages. The characteristic curve of this filter shows a gain of about 24 db. at frequencies below 42.5 k.c., and then an extremely sharp cut-off for frequencies just above the carrier.

4.3 When used in conjunction with a conventional filter, this combination, therefore, cuts off the upper sideband without affecting the lower sideband.

5. TRANSMITTING TERMINAL.

5.1 Referring to Fig. 1, it will be seen that the voice frequencies pass through an equaliser, which is designed to compensate for irregularities in the system, then through a filter, which limits the voice frequency band to 7.5 k.c., and then to the modulator.

5.2 This limitation of the voice frequency band to 7.5 k.c. is important, as a frequency of 8.5 k.c. when modulated becomes 34 k.c., and such a frequency or a frequency close to this value might pass through the pilot filters and interfere with the stability of the carrier oscillators which, as shown above, are controlled by a 34 k.c. pilot.

/ 5.3

5.3 Grid current modulation is used, the carrier being balanced out as described in Paper No. 7. The resulting products of modulation then pass into three filters in tandem.

5.31 The modulator filter is a low pass filter cutting off at 42.65 k.c. and thus eliminates the greater part of the upper sideband.

5.32 The auxiliary modulator filter is a high pass filter cutting off 34.7 k.c. to ensure that frequencies, which might interfere with the pilot, are not allowed through.

5.33 The crystal filter which, as described above, cuts off the lower frequencies of the upper sideband.

5.4 The required lower sideband then passes to the transmitting amplifier, which is a single stage amplifier using four valves in parallel push pull and is capable of delivering a power of 190 milliwatts into a line having an impedance of 600 ohms.

5.5 It will be seen that the pilot oscillator is provided with two outputs, one of which synchronises the local carrier oscillator while the other is fed to line to provide synchronism at the far end.

6. RECEIVING TERMINAL.

6.1 The receiving terminal is shown in Fig. 2. Here the incoming lower sideband passes through carrier frequency equalisers (which are designed to compensate for the attenuation versus frequency characteristic of the line) and then through a high gain amplifier.

6.2 At this point, the pilot is taken through a filter and amplifier to operate the pilot indicator and to synchronise the carrier oscillator.

6.3 The pilot amplifier and receiving amplifier are exactly the same and have three reactance coupled stages, giving a total gain of about 56 db. The actual gain to be used will depend on the length and type of repeater section, and will be adjusted during line-up to a suitable figure. In addition, an input potentiometer provides a working margin of 20 db. in steps of 1 db.

6.4 The required sideband, that is, 35 k.c. to 42.5 k.c., passes from the receiving amplifier to a group of filters, which are the same as those used in the transmitting terminal. This group of filters ensures that the required sideband only is introduced into the next unit (the demodulator) which is again similar to the modulator used in the transmitting terminal.

/ 6.5

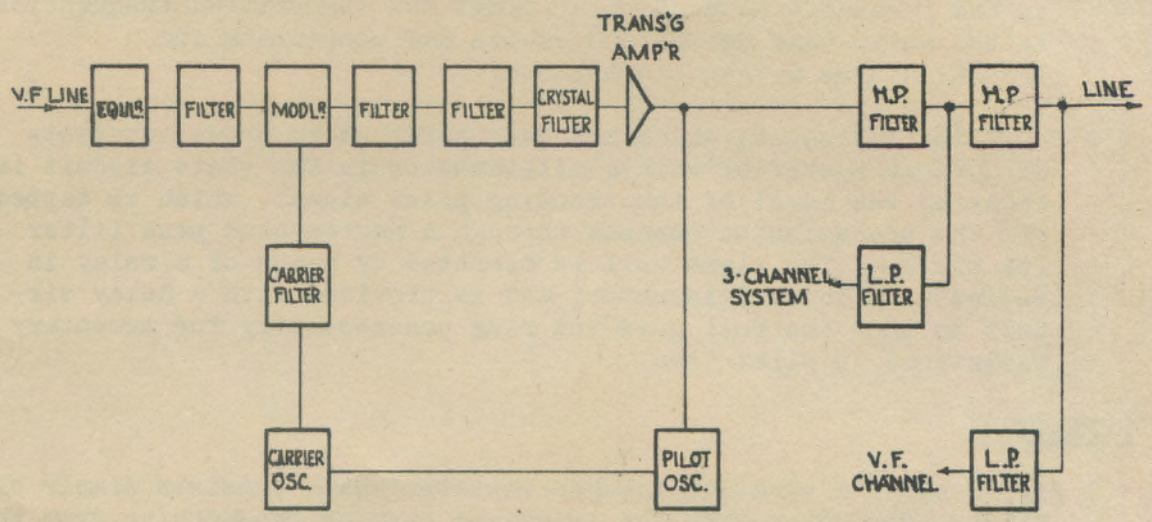

FIG. 1.
CARRIER PROGRAMME CHANNEL
TRANSMITTING TERMINAL

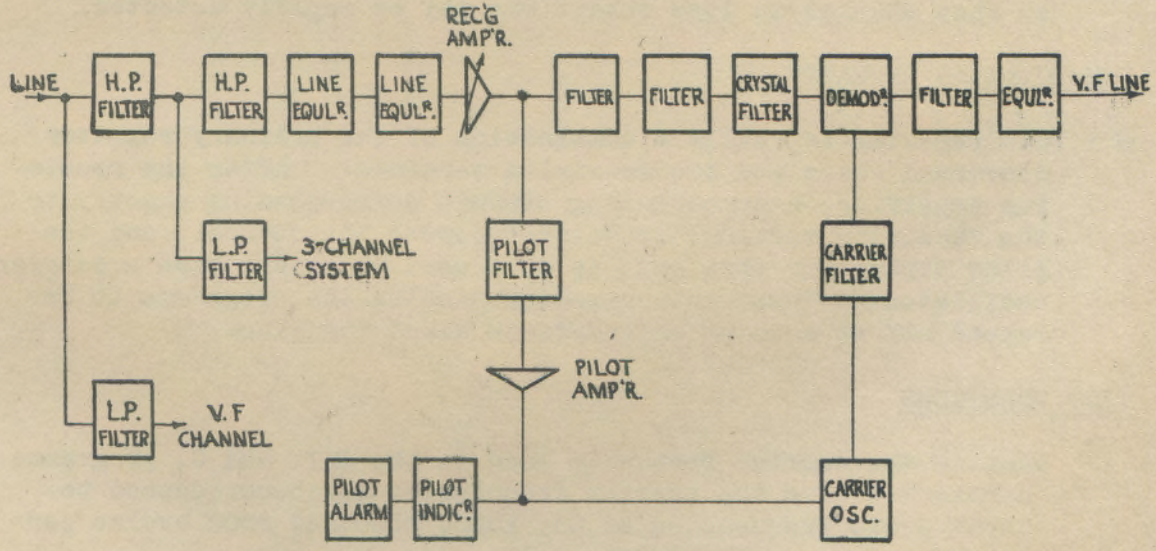

FIG. 2.
CARRIER PROGRAMME CHANNEL
RECEIVING TERMINAL

6.5 From the demodulator it passes to a filter and equaliser which, as in the transmitting condition, limit the transmitted frequencies to the audio band 35 to 7500 cycles and compensate for irregularities within the terminal.

6.6 The pilot indicator, which has been referred to above, consists of a valve rectifier with a milliammeter in the plate circuit indicating the level of the incoming pilot signal, which is tapped off the transmission channel through a narrow band pass filter (34 k.c.). The alarm bell is operated by means of a relay in series with the milliammeter, and is provided with a delay circuit so that the bell does not ring unnecessarily for mementary variations in pilot level.

7. REPEATERS.

7.1 Fig. 3 shows a straight through repeater which consists simply of filters for separating the programme carrier frequencies from the 3-channel and voice frequencies, equalisers for compensating for the attenuation v. frequency characteristic of the line, and two amplifiers. These two amplifiers are exactly the same as the receiving amplifier used at the receiving terminal and the transmitting amplifier used at the transmitting terminal, and are used in tandem.

7.2 At the output from the receiving amplifier the pilot circuit is bridged across the line for operation of the pilot indicator so that changes in line conditions may be rapidly detected.

8. DEMODULATING REPEATER.

8.1 This repeater is really a combination of the ordinary repeater discussed above and the receiving terminal. After the receiving amplifier, a demodulating circuit corresponding exactly to the receiving terminal is bridged across the channel, and the pilot circuit in this case is also used to synchronise a carrier oscillator. Thus, this repeater enables the programme to be tapped off at a point intermediate along the line.

9. TEST QUESTIONS.

1. What is the carrier frequency used in the S.T. and C. programme carrier? Give the carrier frequencies which correspond to input audio frequencies of 50, 1000, 3500 and 6500 cycles per second.

2. What special measures are adopted to ensure exact synchronism of the transmitting and receiving terminals of the programme carrier?

/ 3.

3. Why is a crystal filter incorporated in a programme carrier?

4. Draw the block schematic circuit of the demodulating repeater used on the programme carrier.

5. Draw the attenuation characteristics, clearly indicating the cut-off frequency of the various filters associated with the transmitting terminal.

6. The filter in the V.F. line of the transmitting terminal is of the same type as used in the V.F. line of the receiving terminal. Describe the purpose of this filter in each position.

7. What additional equipment would be necessary to provide monitoring facilities in a straight through repeater?

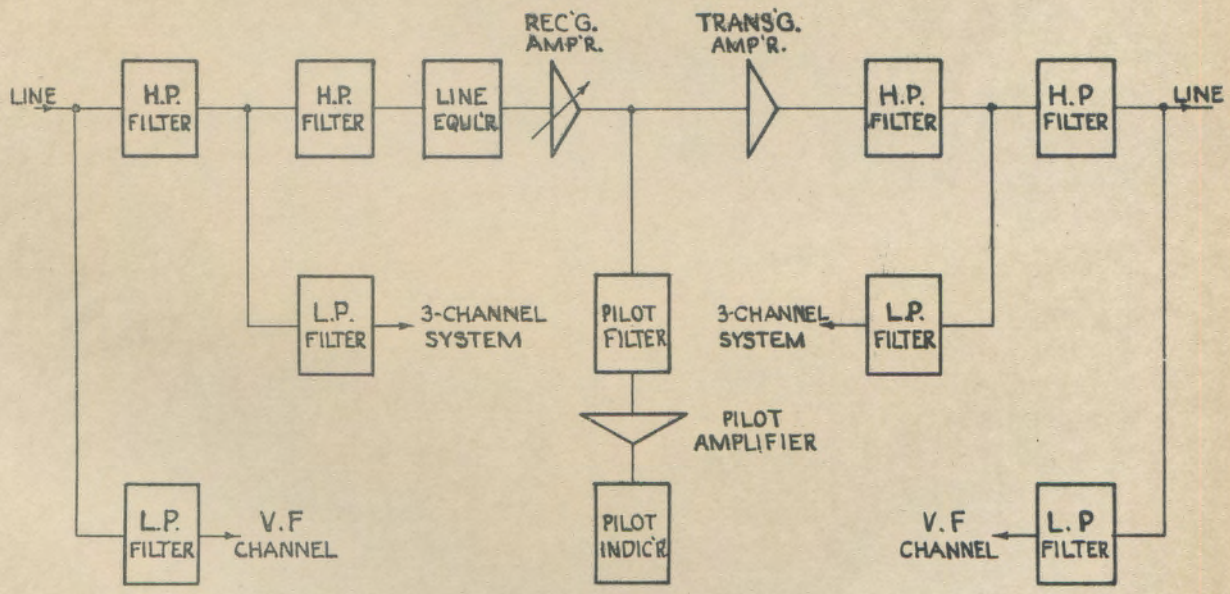

FIG. 3.
CARRIER PROGRAMME CHANNEL REPEATER

END OF PAPER.

COMMONWEALTH OF AUSTRALIA.

Chief Engineer's Branch,
Postmaster-General's Department,
Treasury Gardens,
Melbourne, C.2.

COURSE OF TECHNICAL INSTRUCTION.

LONG LINE EQUIPMENT.

WIDE BAND CARRIER SYSTEMS.

CONTENTS:

1. INTRODUCTION.

2. TYPE J CARRIER SYSTEM (AERIAL WIRES).

3. TYPE K CARRIER SYSTEM (CABLE WIRES).

4. SYDNEY-MAITLAND CABLE CARRIER SYSTEM.

5. TEST QUESTIONS.

1. INTRODUCTION.

1.1 Wide band carrier systems operate through a much wider overall range of frequency, and are therefore capable of providing more speech channels per system than single and three channel carrier systems. This paper indicates the general principles of operation and application of wide band carrier systems, but does not provide a comprehensive treatment of the subject.

1.2 The first of these wide band systems, the Type J, (J12), for open wire lines requires a frequency range extending from 36 kC/sec. to 140 kC/sec. and provides 12 speech channels. Since the same pair of wires on which a J system is superimposed may carry in addition the normal telephone circuit and a 3 channel carrier telephone system, it is possible to derive 16 speech circuits from the one pair of wires. Pictures of this carrier system are shown on pages 4 and 6.

1.3 Another similar system is the Type K which is designed to operate over cable wires. This system employs the same channel frequencies in both directions but uses two cable pairs, one pair transmitting in each direction.

1.4 The practical application of wide band carrier systems necessarily introduces additional problems in controlling losses and avoiding noise and crosstalk.

/ 2.

2. TYPE J CARRIER SYSTEM (AERIAL WIRES).

2.1 Fig. 1 shows a block schematic diagram of the terminal and repeater equipment of the Type J 12-channel system, and also the three channel carrier system which may be associated with it on the same line, and Fig. 2 shows a more detailed block schematic of the Type J terminal. The system shown is known as the Type J2.

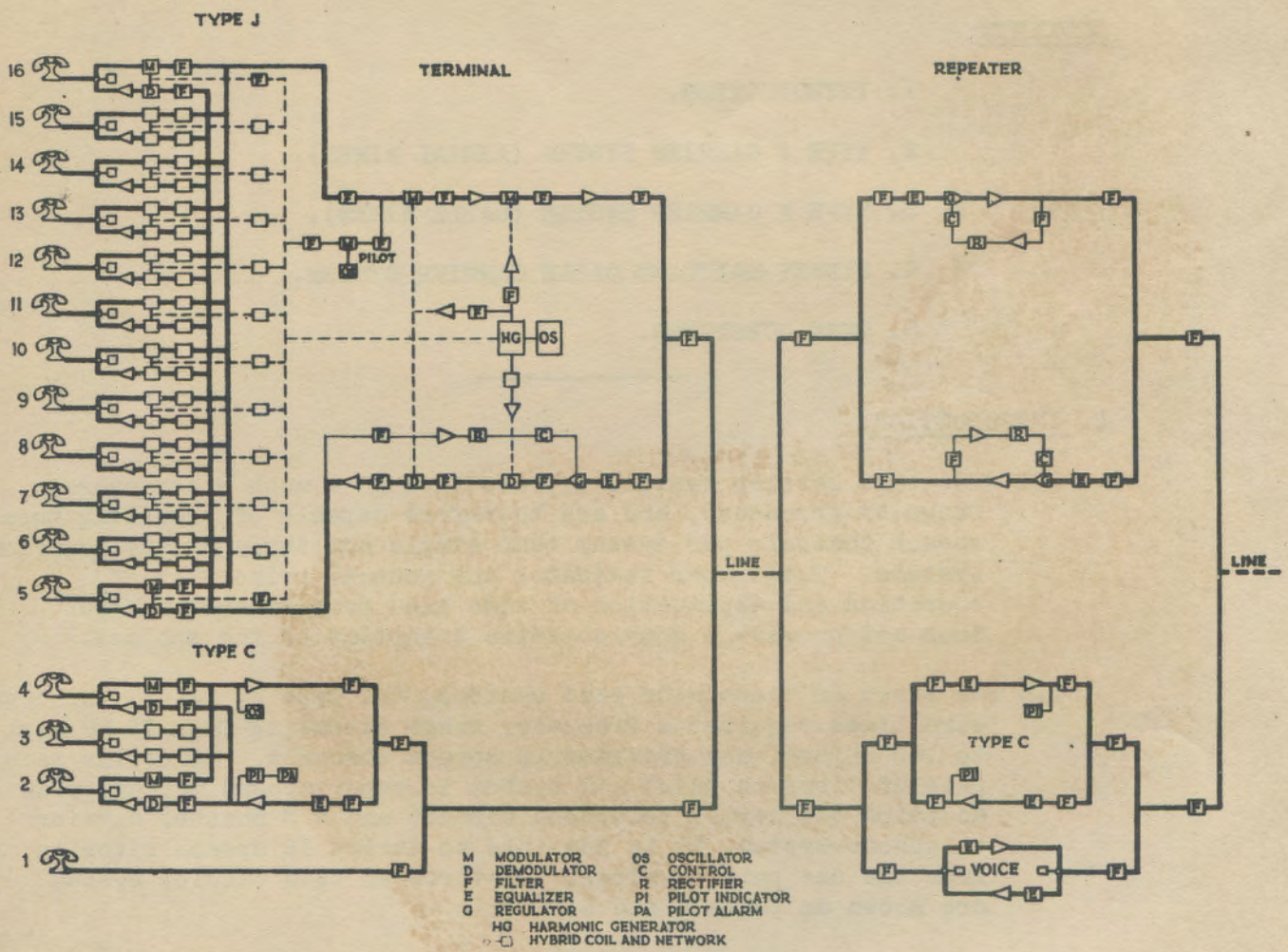

TYPE J CARRIER SYSTEM.

TERMINAL AND REPEATER LAYOUT.

FIG. 1.

The first type J system introduced was known as the J1 system. This system was superseded by the J2 system which is similar to and adapted to the same field of application as the J1 system in that it provides 12 two way telephone channels on an open wire pair in the frequency range from 36 to 142 kC./sec. The same channel band as that employed in the J1 system is used. Also the line equipment and a large proportion of the terminal equipment is essentially the same as employed in the J1 system. The following are the more important improvements included in the J2 system.

(1) Four frequency allocations which permit more liberal crosstalk coupling requirements on open wire lines.

(2) A maximum repeater and normal terminal gain at 140 kC./sec. of 77 decibel compared with 45 decibel in the J1 system.

(3) Regulation by means of two pilot frequencies in either direction of transmission and automatic adjustment of equalisation and gain for a wider range of line attenuation changes.

The first type J system installed Melbourne-Sydney was a J1 Type NA system. The second system installed on this route was a J2 Type SA system. All new systems in future will be of the J2 type, and it is this system which will be described in this paper.

2.2 Group Modulation. Reference to Fig. 2 indicates that the principles of operation do not materially differ from those employed in 3 channel telephone systems. The additional feature which characterises the

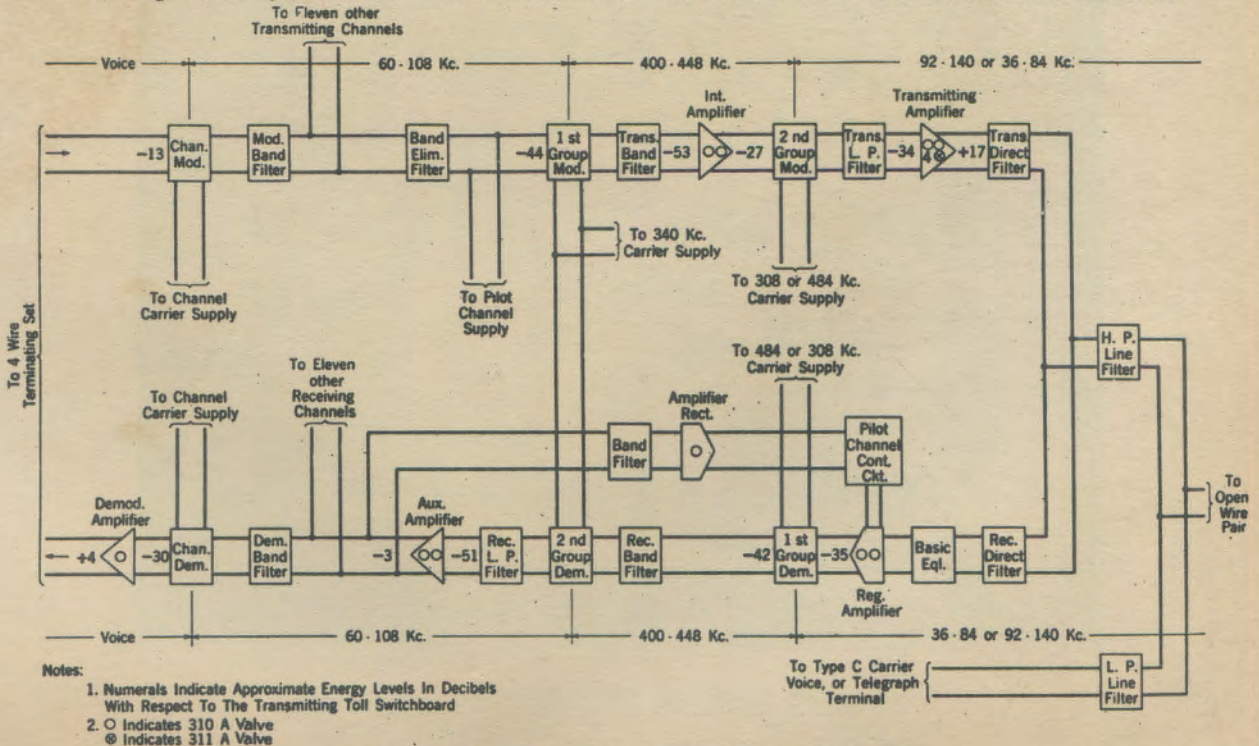

FIG. 2. TYPE-J CARRIER TELEPHONE TERMINAL

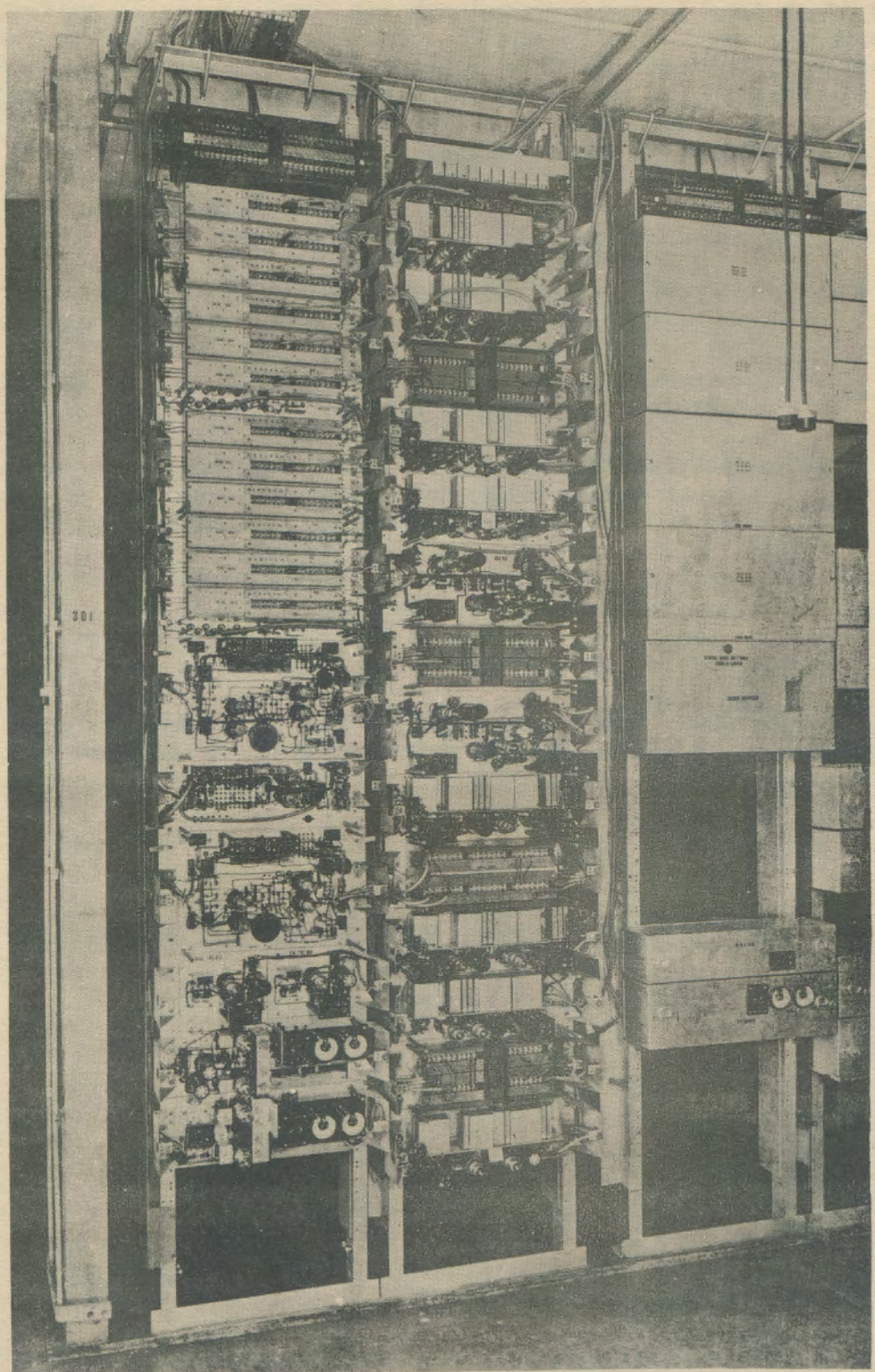

TYPE J2 CARRIER TELEPHONE SYSTEM.
CHANNEL AND GROUP CARRIER SUPPLY BAYS.

system is that of group modulation, for in addition to the initial stage of modulation and demodulation per channel, there are also other stages of modulation and demodulation wherein the total group of channels is transferred to the required portion of the frequency spectrum. The basic purpose of group modulation may be summarised as follows:--

(a) To permit the use of the most desirable group of frequencies for the initial channel modulation.

(b) To apply to line the most suitable band of frequencies for optimum transmission efficiency.

2.3 Frequencies Used. The 12 carrier channel frequencies (i.e. the basic frequencies) employed are 64, 68, - 108 kC. (4 kC. separation between carrier frequencies). The main reasons for selecting the above basic frequencies are:--

1. High grade crystal filters can be most economically designed for operation in this part of the frequency spectrum. This type of filter permits a wider transmitted band for a given channel spacing, a more uniform attenuation in the pass band, a steep cut off in the stop band, together with more compact assembly than is obtained from the coil and condenser type of filter. The filter elements are hermetically sealed in cans.

2. The range is high enough so that the lowest harmonic of the lowest frequency is above the highest frequency of the band (thus, the 2nd harmonic of 60 kC. - which is the lower sideband of 64 kC. No. 1 carrier - is 120 kC. which is well above the top channel frequency of 108 kC.). This obviates the possibility of harmonic production during modulation causing inter-channel interference.

3. General economy in manufacture by utilizing the same basic frequency group for all wide band systems, i.e. open wire and cable carrier systems.

The 12 basic channel frequencies, after their initial modulation with the applied voice frequencies and after elimination of all products of modulation, except the lower side band, by channel band pass filters, represent a frequency band 48 kC. in width which is translated by additional stages of group modulation to the band of frequencies it is desired to transmit over the line.

The range of the final frequency band to be transmitted to line depends on the direction of transmission since transmission in both directions is over the same pair of wires (in other words grouped frequency working is necessary). / Thus

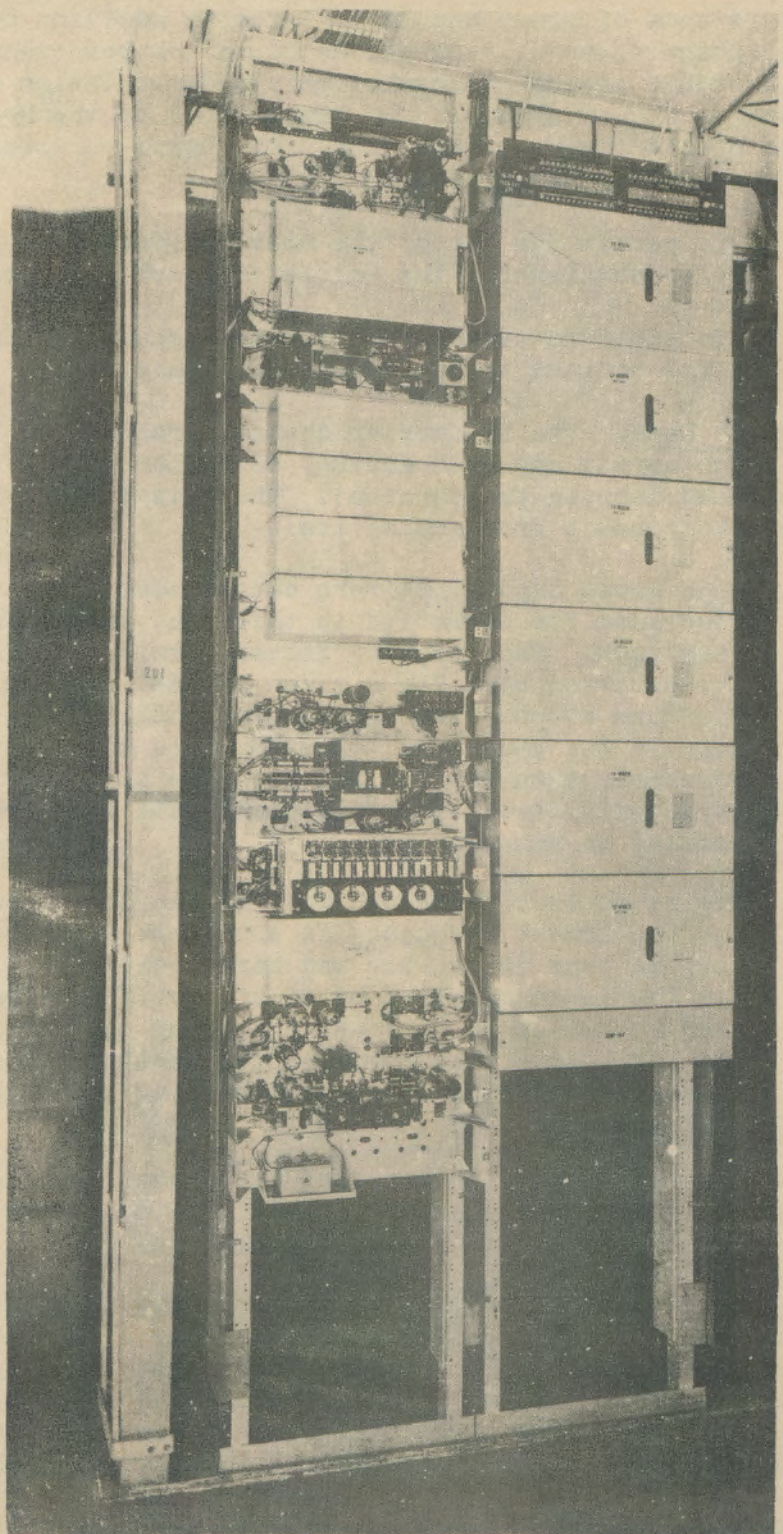

TYPE J2 CARRIER TELEPHONE SYSTEM.
GROUP TERMINAL AND CHANNEL MODEM BAYS.

Thus	West To East (or B " A)	East To West (or A " B)
	36 kC. - 84 kC.	92 kC. - 140 kC.

Now, considering the above frequency groups for transmission over the line it will be noted that they both overlap the basic 60-108 kC. band; thus a direct translation from basic frequency to transmitted frequency is impracticable. It is therefore necessary to make the translation from basic to line frequency groups in two distinct stages as indicated in Fig. 3. (Fig. 2 indicates position in circuit of 1st and 2nd group modulator and demodulator units). Examination of Fig. 3 will show that for transmission A - B the initial 60-108 kC. band is delivered to the 1st group modulator with an applied carrier of 340 kC., and the products of modulation include the upper side band 400-448 kC. which is selected by the transmitting band filter and passed on via a 2 stage intermediate amplifier to the 2nd group modulator, where the applied carrier is 308 kC. and the products of modulation include the lower side band 92-140 kC.; this frequency group is selected by the transmitting L.P. filter and after amplification in the transmitting amplifier is applied to line over the trans-directional filter, and H.P. line filter. The translations in the receiving direction are exactly opposite to those described above and may be followed through from Fig. 3.

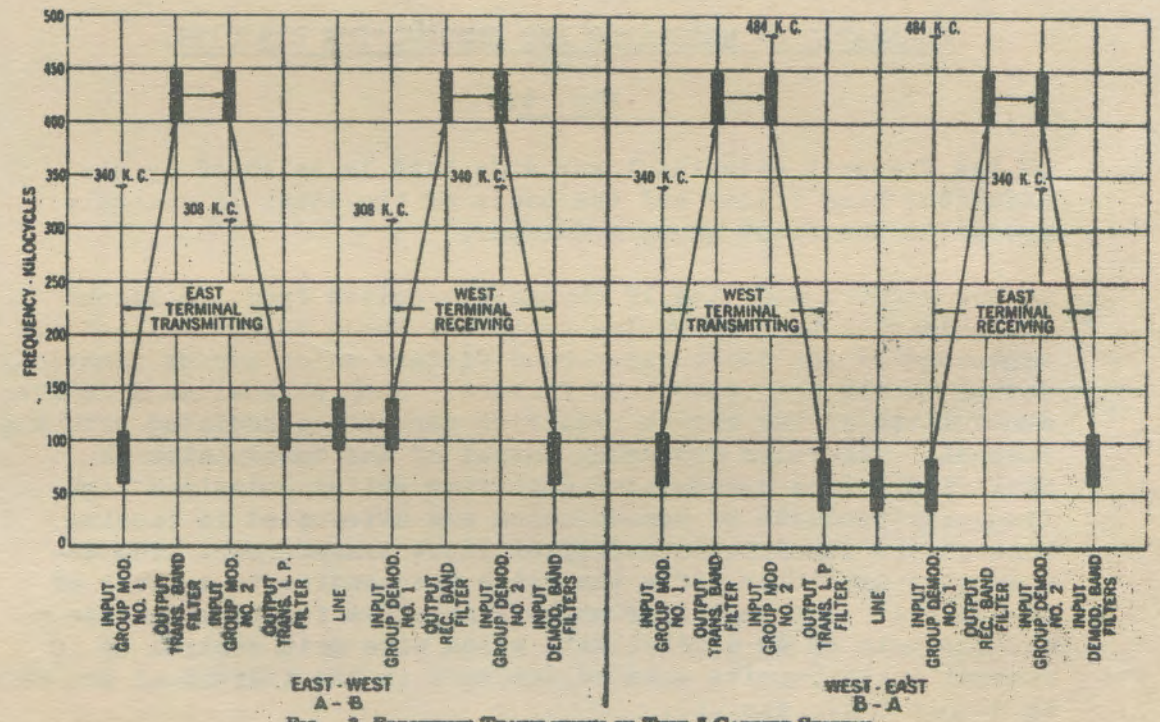

FIG. 3. FREQUENCY TRANSLATIONS IN TYPE-J CARRIER SYSTEMS

2.4 Channel Modulator and Demodulator. Bridge type rectifier units are employed as channel modulators and demodulators. The modulator and demodulator of each channel are supplied with the same carrier frequency. The bridge circuit, as shown in Fig. 4, largely suppresses the carrier frequency. Impedance matching pads are connected between the rectifiers and the band filters to correctly terminate the filters.

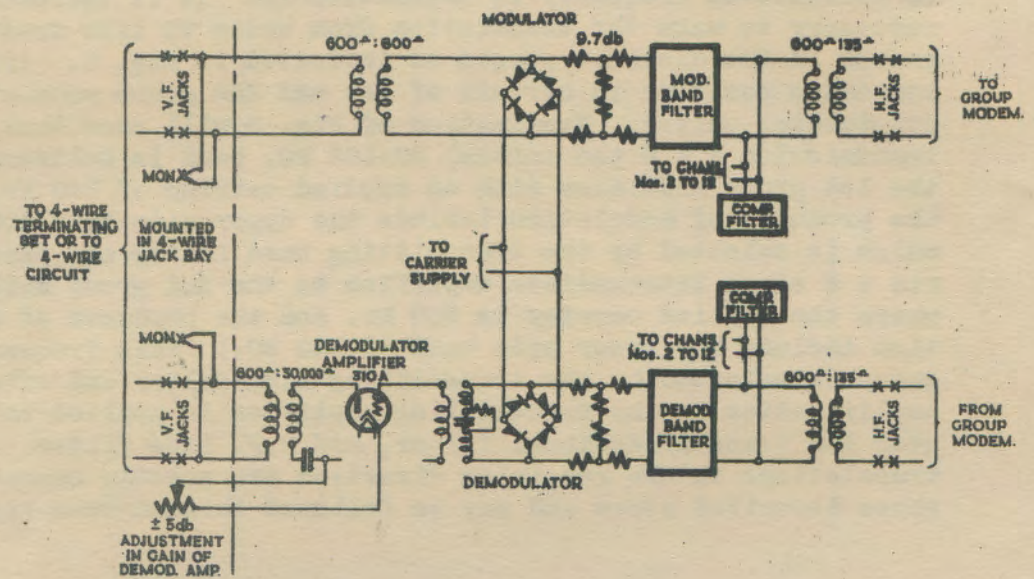

SCHEMATIC OF MODULATOR AND DEMODULATOR CIRCUITS.

FIG. 4.

On the transmit side the lower side band is selected by the modulator band filter and the bands of the total 12 channels passed to the first group modulator.

On the receive side the 12 channels received from the second group demodulator occupy the frequency range 60-108 kC. and are separated by the demodulator band filters which are of identical design to the modulator band filters. Each channel band is then demodulated in the bridge rectifier assembly associated with the channel. The voice frequency output of the demodulator is amplified by the demodulator amplifier whilst undesired high frequency products of demodulation are attenuated in passing through the demodulator amplifier input transformer. The demodulator amplifier lifts the voice frequencies to a level of +4 decibel; the amplifier employs negative feedback and has a maximum gain of 40 decibel with slide wire gain control of 10 decibel which permits gain adjustments in the individual channels to within ± 0.1 decibel.

/ The

The channel modulators are designed so that a certain amount of peak voltage limiting will occur on loud conversations and thus prevent overload of the common amplifiers. The non-linear distortion introduced by the limiting action is negligible on average volume conversations.

2.5 Group Modulator and Demodulator. As detailed previously the function of the group modulators and demodulators is to shift the combined 12-channel frequency group to the desired part of the frequency spectrum.

On the transmit side (see Fig. 2) the combined output of the channel modulators, consisting of 12 lower sidebands in the range 60-108 kC/sec., is first passed through a band elimination filter. At a West terminal the band elimination filter attenuates two of the channel carrier leaks which are of the same frequencies as the pilots (which are also introduced at the input of the first group modulator) thereby preventing interference with the pilot control functions. At an East terminal the band elimination filter attenuates all the channel carrier leaks to prevent their introduction into the channels of adjacent staggered systems. The combined output is then impressed on the 1st group modulator via a hybrid coil input (not shown in Fig. 2). The reason for the hybrid input is so that the channel frequencies can be introduced into the modulator via one winding and pilot frequencies via the other, thus providing a desirable separation between pilot channel supply and the channel modems (modulator-demodulator units).
Both group modulators employ ring type rectifier modulators to balance both the carrier and the original applied signal group.
Following the 1st group modulator is a transmitting band filter which rejects all the unwanted products of the group modulation and passes the required frequency band to the intermediate amplifier. This amplifier is a two stage negative feedback type having a gain adjustable between 25 and 38 decibel.
The intermediate amplifier output is applied to the 2nd group modulator which differs from the 1st group modulator only in one respect, namely, a simple input transformer is used in lieu of a hybrid coil arrangement.
Following the 2nd group modulator is a low pass filter which attenuates all frequencies above 150 kC. and thus transmits the wanted products of modulation and suppresses the unwanted products.
On the receive side the incoming frequency group after passing through directional filters, equalisers and regulating equipment enters the 1st group demodulator circuit. After demodulation the receiving band filter eliminates all unwanted products and the combined frequency group is passed to the 2nd group demodulator, and the output then contains the basic range 60-108 kC. A receiving low pass filter attenuates all undesired higher frequency components and this filter is followed by a two stage negative feedback auxiliary receiving amplifier which has a fixed gain of 45 decibel.

/ The

The output of the amplifier connects to the input of the channel demodulator band filters whence each channel is directed to its individual demodulator, the required products of demodulation being amplified in the demodulator amplifier and passed via the 4 wire terminating set to the switchboard.

2.6 Generation of Carrier Frequencies. For wide band carrier systems both open wire and cable, it is the practice to use a single base frequency generated by a tuning fork controlled thermionic valve oscillator, and to obtain the various carrier frequencies needed from this base frequency by means of harmonic producing devices. The essential circuits and apparatus units employed in the wide band systems are shown schematically in Fig. 5.

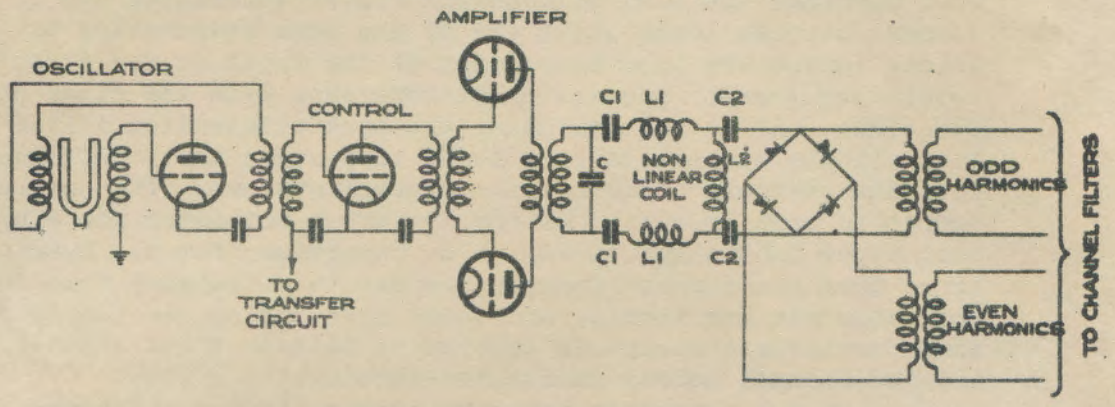

CARRIER SUPPLY FOR WIDE BAND SYSTEMS.

FIG. 5.

The generated frequency of the oscillator valve is controlled in this case by a 4 kilocycle tuning fork. This tuning fork is made of an alloy having a low temperature coefficient, and its stability is such as to hold the frequency of oscillation accurate to within plus or minus one part in a million. (In the latest design of the Type K system the tuning fork control has been replaced by crystal control.) The oscillator output is amplified in two stages to a value of about 4 watts by the control valve and two power valves operating in a push pull arrangement. The control valve also operates in conjunction with an auxiliary transfer circuit (not shown in Fig. 5) to automatically bring into service an emergency oscillator circuit in case of failure of the regular circuit. The secondary of the amplifier output transformer and the parallel condenser C are designed to be anti-resonant at 8 kilocycles, and thus to short out any second harmonics developed in the amplifier valves. The series condensers and inductances C_1 and L_1 are resonant at 4 kilocycles and thus favour transmission of a pure sine wave of 4 kilocycle current to the bridged coil L_2. This latter coil, in conjunction with the condensers C_2, produces odd harmonics of

/ the

the applied 4 kilocycle frequency. Its behaviour in this respect is a very interesting example of the use of permalloy magnetic material.

The action of the coil as a harmonic producer depends upon the fact that its magnetic core becomes saturated at relatively low current values. The coil is physically quite small and is wound upon a core of coiled permalloy ribbon. The behaviour of this coil and its associated condensers may be understood by reference to Fig. 6 where all that part of the circuit in the right section of Fig. 5 is indicated by the single load resistance R_2. When a single cycle e_o of 4 kilocycle voltage, as shown in Fig. 7a, is applied to the circuit, as the current increases from zero the inductance of the coil bridged across the line will at first be high and as a result current will flow into the condenser and the load R_2. This current is pictured by the small section ab on the curve of Fig. 7b. When the applied voltage increases to the critical value "X", however, the core of the coil becomes saturated and the inductance of the coil immediately decreases to zero. As the coil has a low resistance it then becomes effectively a short circuit across the line and no additional current flows from the generator into the load. On the contrary, the charged condenser C_2 (see Fig. 6) discharges through the coil causing the sharply peaked negative current surge shown in the section bc. For the remaining part of the positive pulse of the applied voltage the coil continues to act as a short circuit, the condenser remains discharged and current does not flow in the load. When the applied current reverses in direction, however, the coil again presents a high inductance to the low values of negative current applied and a small negative current de flows into the condenser and the load, but again as soon as the coil becomes saturated the condenser discharges to cause the sharp positive peak of current ef. An analysis of the curious current wave of Fig. 7b shows that it includes all the odd harmonics of the applied 4 kilocycle current, and further that up to very high frequencies the amplitude of all these harmonics is approximately the same.

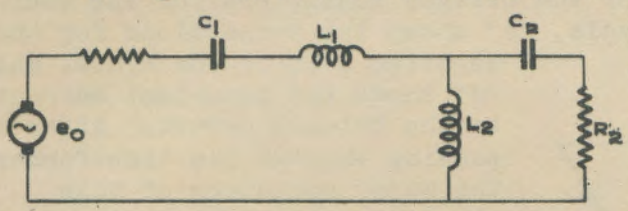

FIG.6.

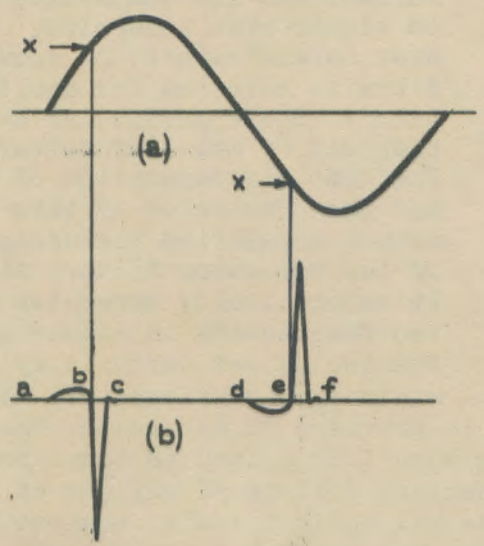

FIG.7.

As indicated by Fig. 5 these odd harmonics are separated for use in the various carrier channels by means of filters. Even harmonics are obtained by means of the Wheatstone Bridge arrangement of metal rectifiers shown bridged across the circuit. These rectifiers rectify about half of the energy coming from the non-linear coil L_2, and in the ideal case this rectified energy appears entirely in the form of even harmonics of 4 kilocycles. The reason for this may be clear from Fig. 8 where "a" is the curve for any one of the odd harmonics applied to the bridge, "b" shows the effective connections of the bridged rectifiers for the positive half of the current cycle, "c" shows the connections for the negative half of the cycle, and "d" shows the resultant current in the bridged output. After passing through the transformer the major component of this output current will be the first even harmonic of the applied current and its components will be higher even harmonics. The even harmonics are, of course, likewise selected for application to their particular carrier channels by means of filters. The complete separation of odd and even harmonics by this method simplifies the design of the selecting filters since it automatically separates any two frequencies in either of the two output circuits by a minimum of 8 kilocycles. All group carrier supply equipment is provided in duplicate, the distribution arrangements being such that a load is connected at all times to both sets. Momentary failure of any one of the group carrier frequencies causes automatic transfer equipment to switch the equipment to the other carrier supply generator.

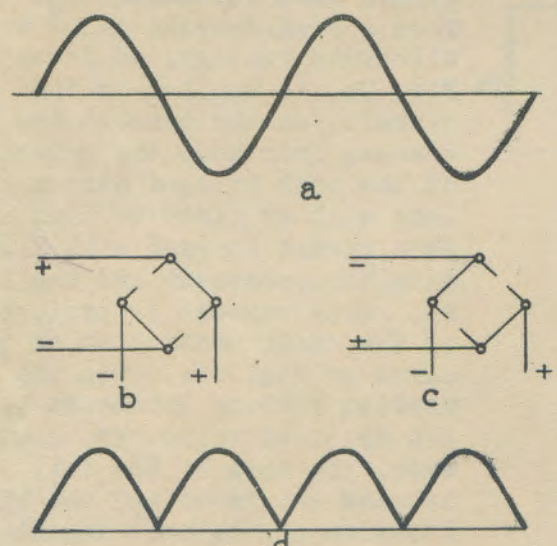

FIG.8.

2.7 Common Transmitting and Receiving Circuits. On the transmit side the output of the transmitting low pass filter of the 2nd group modulator is amplified by the transmitting amplifier and applied to line via the transmit directional filter.

On the receiving side, the incoming frequencies are selected by the receive directional filter, equalised, and regulated by the regulating amplifier circuit and passed to the 1st group demodulator.

The transmitting amplifier provides a constant gain of approximately 52 decibel and has a flat gain characteristic over the range 36 to 143 kC./sec. Three stages of amplification are employed and 4 valves are paralleled in the output stage to pro-

/ vide

vide adequate power handling capacity. The input and output coils are of the hybrid type, one set of windings forming a part of the main (outer) feedback path. This stabilises the input and output impedances of the amplifier and the inclusion of the input and output transformers in the feedback path controls their frequency response characteristics. In addition, there is a second or inner feedback path between the 1st two stages of amplification. The outer feedback path includes an equaliser network to give a flat gain versus frequency response.

2.8 Repeater Type J. The repeater consists of the directional filters and line amplifiers for each direction of transmission. Also associated with the repeater is the regulating amplifier and pilot channel control equipment. A schematic circuit is shown in Fig. 9.

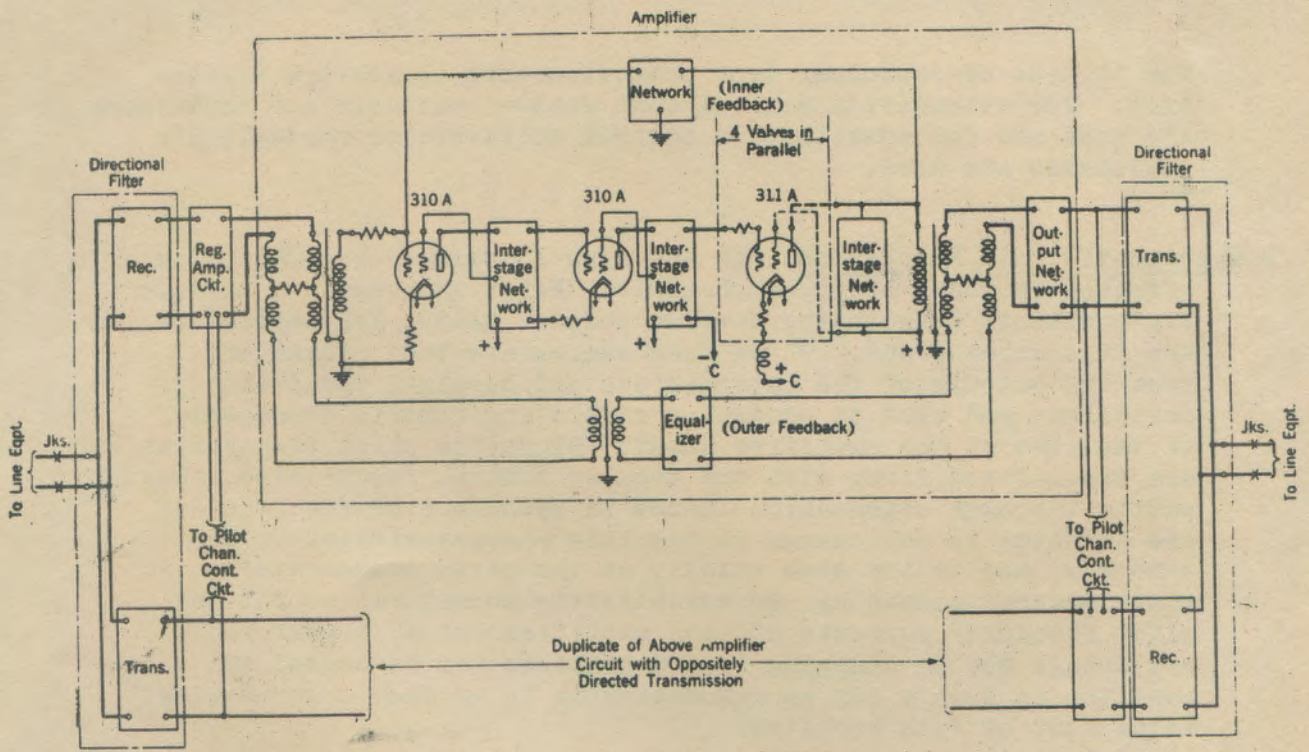

FIG. 9. TYPE-J CARRIER REPEATER CIRCUIT

Incoming line frequencies are selected by the appropriate directional filter, regulated and equalised partly by the regulating amplifiers, then amplified and further equalised by the line amplifier and transmitted to line via the outgoing directional filter.

The directional filters are coil and condenser type and an important feature of the design is the incorporation of equalisation within the filters to compensate for the non-uniformity of loss over the pass band of the directional and line filters.

/ The

The filters are designed to have a nominal impedance of 125 ohms.

The line amplifiers are identical with the transmitting amplifiers employed in the terminals with the exception that the A - B line amplifier provides a fixed portion of the required equalisation, the gain varying from 43 decibel at 92 kC. to 53 decibel at 143 kC.

The regulating amplifier in the type J2 systems operates under the control of two pilot frequencies; level variation of one of the pilots changes the gain versus frequency slope of the regulating amplifier (i.e. equalisation adjustment) whilst the other pilot changes the overall gain of the amplifier (i.e. attenuation regulation).

Use is made of condenser type potentiometers to achieve regulation. For attenuation control dual stator variable air condensers are used and for equalisation control multi-stator variable air condensers are used.

2.9 Automatic Gain Regulation. In the type J systems, regulation is effected by means of pilot channels. Pilot frequencies, occupying positions between the carrier channel bands, are applied to the line at each end. These frequencies are then picked off from the outputs of the intermediate and terminal receiving amplifiers and used to control a regulating circuit connected in the line at the amplifier input. Since the pilot frequencies are transmitted along with the regular channel frequencies, they suffer the same attenuation losses in passing over the line and are affected by any change in the line characteristics in the same way, and to the same extent, as the message currents in their several channels. By establishing normal values for the pilot frequency currents at each amplifier point, therefore, any change due to changing line conditions may be caused to register in such a way as automatically to produce a correcting adjustment of each repeater.

The detailed arrangement for accomplishing this result varies somewhat as between different carrier system designs, but Fig. 10 illustrates schematically the regulating circuit used in the J systems. (It is also practically identical with the circuit employed in the most recent design of CS and CU 3 channel systems.) As was shown schematically in Fig. 2 for the Type J terminal circuit, the pilot channel current is applied to the line at the input of the first group modulator. At repeater points, this single-frequency current is tapped off at the output of the line

/ amplifier

amplifier and led back through an amplifier and rectifier circuit to a pilot channel control circuit which controls the net loss or gain of a regulating amplifier connected into the main transmission path in front of the line amplifier. As shown in Fig. 2, the same general plan applies at the receiving terminal, except that here the pilot channel current is taken off at the output of the auxiliary amplifier following the second group demodulator.

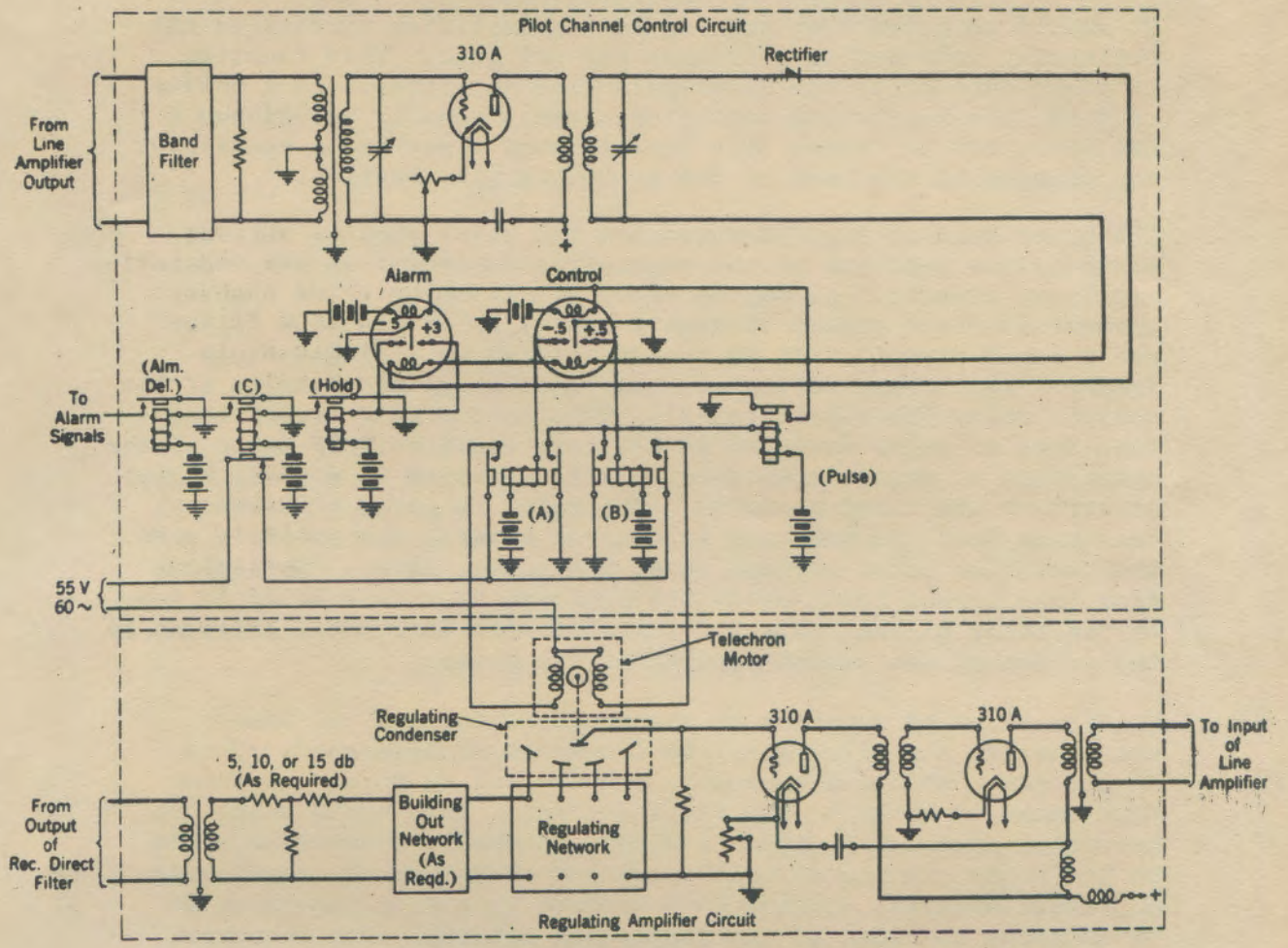

FIG. 10. REGULATING AMPLIFIER AND CONTROL CIRCUIT FOR OPEN WIRE CARRIER SYSTEMS

The regulating amplifier circuit consists essentially of a variable attenuator in series with a two-stage amplifier. The attenuator, known as the regulating network, is designed to have loss-frequency characteristics similar to those of the line and is divided into three units of equal loss. Its net loss to through transmission is varied by means of a condenser whose movable plate is rotated under the control of the pilot channel current. The rotor of the condenser is connected to the control grid of the first thermionic valve of the amplifier so that the voltage applied to the amplifier depends upon the position of the condenser plate. When the condenser rotor is at its extreme left position, the regulating network is effectively out of the transmission path.

/ At

At its extreme right position, on the other hand, the entire network is in the transmission path; and at any other position, the loss inserted is some definite fraction of the total loss of the regulating network. This arrangement provides a very smooth control of the net loss or gain of the regulating circuit and avoids the use of sliding contacts or relays in the transmission path.

It should be noted that the regulating amplifier circuit is not ordinarily intended to introduce any net gain. This function is taken care of by the fixed-gain line amplifier. As a matter of fact, the regulating amplifier circuit usually introduces a net loss, but it varies this loss in such a way as to counteract any changes in the loss of the preceding line section.

The upper part of Fig. 10 shows how the pilot channel current controls the position of the regulating condenser in the regulating amplifier circuit. As may be seen, the incoming pilot channel current is first passed through a highly selective band filter and a tuned circuit. It is then amplified by a single-stage feedback amplifier, rectified, and led through the winding of the control relay (Sensitrol relay). This latter is a highly sensitive type of relay designed to act very positively by means of the attraction of magnetic material on its armature to a small magnet on each of the fixed contacts. The relay is given a mechanical bias such that its armature is centred between the contacts when the rectified pilot current is at the normal level. Deviations from this normal level cause the armature to move sharply to one or the other of the contacts, where it will stay until released by the action of the second winding of the relay.

The direction of movement of the armature depends, of course, upon whether the pilot level is increased or decreased. Thus, if the level should increase by 0.5 decibel or more, the armature would be moved to the right contact. This would cause the operation of relay B which in closing connects 60-cycle current to the right winding of the "telechron" motor in the regulating amplifier circuit, causing it to rotate in such a direction as to increase the loss of the regulating network. The telechron motor will continue to operate until the control relay is released. This release is effected by means of the "pulse" relay, the winding of which, it may be noted, is connected to a second contact of relay B. The pulse relay is a special slow-operating type which does not operate until four seconds after the path through its winding is closed. When it does operate, a circuit is closed through the second winding of the control relay. This restores its armature to normal, thus releasing relay B and opening the circuit to the telechron motor.

To summarize, then, what happens is that when the pilot channel current deviates from normal, the telechron motor operates for

/ four

four seconds to counteract the effects of this deviation, and then stops. If sufficient correction is not obtained in this time, the operation is, of course, repeated. For deviation in the reverse direction, the same series of operations occur, except that relay A now functions and the telechron motor is rotated in the opposite direction.

The remaining relays shown in Fig. 10 are provided to take care of sudden large changes in the pilot channel level. Such changes either require manual attention or are of such short duration that a correction would be undesirable. The alarm relay (the winding of which is in series with that of the control relay) is adjusted to operate only for large level changes of plus or minus several decibel. If such a change occurs, both the alarm and control relays will operate, but the operation of the alarm relay closes a circuit through the winding of the "hold" relay. The latter, in turn, causes the C relay to operate, which opens the circuit to the telechron motor and thus prevents any change in the regulating amplifier circuit. At the end of four seconds, the operation of the pulse relay restores both the control and alarm relays to normal. The hold relay has a release time of four seconds and, if the level change still persists, correction is not made because relay C remains operated. If the level change were temporary, however, relay C will release after four seconds and normal regulation will be resumed. If a level change of sufficient magnitude to operate the alarm relay persists for any considerable time, the second contact on relay C will cause the "alarm delay" relay to operate after a period of 25 seconds. The alarm delay relay will then cause the operation of other relays to give visible and audible alarms that the equipment needs manual attention.

2.10 Equipment Features. Single-side wiring and maintenance arrangements have been adopted for the Type J carrier equipment design. Accordingly, the various carrier equipment units are designed for mounting on a framework arranged for both wiring and maintenance from the front of the bay. In order to provide cabling ducts between panels on adjacent bays, the frameworks are on 22-1/2" centres. The panels have the standard length of 19", and covers 22-3/16" wide are provided to cover both the panels and the cabling.

Terminal strips and apparatus requiring maintenance, such as thermionic valves, jacks, etc., are accessible from the front of the panels. Most of the apparatus, however, is of the stud mounted type and is on the rear with terminals through the panels for wiring on the front.

/ 3.

3. TYPE K CARRIER SYSTEM (CABLE WIRES).

3.1 The Type K system, as stated previously, is designed for application to cable facilities and employs the same channel frequencies for transmission in both directions but actually uses two pairs of cable wires, one pair transmitting in each direction. This system makes use of the same types of crystal filters, copper oxide modulators and equalisers as the Type J system, and actually the channel modulating and demodulating circuits are identical as shown in Fig. 11. So far as transmission over the line is concerned, however, the techniques employed in the two systems are necessarily quite different. Since any practicable type of cable circuit loading cuts off at a comparatively low frequency, it is necessary to use non-loaded cable wires for wide band transmission. Because the attenuation of such non-loaded is very high and, of course, increases with frequency, it is desirable to keep the maximum frequency to the lowest practicable value. Accordingly, the band of frequencies selected for transmission on the cable line is that between 12 and 60 kC. which occupies the comparatively straight line portion of the attenuation-frequency curve just above the knee of the curve. By using pairs of wires in separate cables for transmission in the two directions, only one 48 kC. band is required. On this basis the line losses are such as to require the insertion of high gain repeaters at frequent intervals.

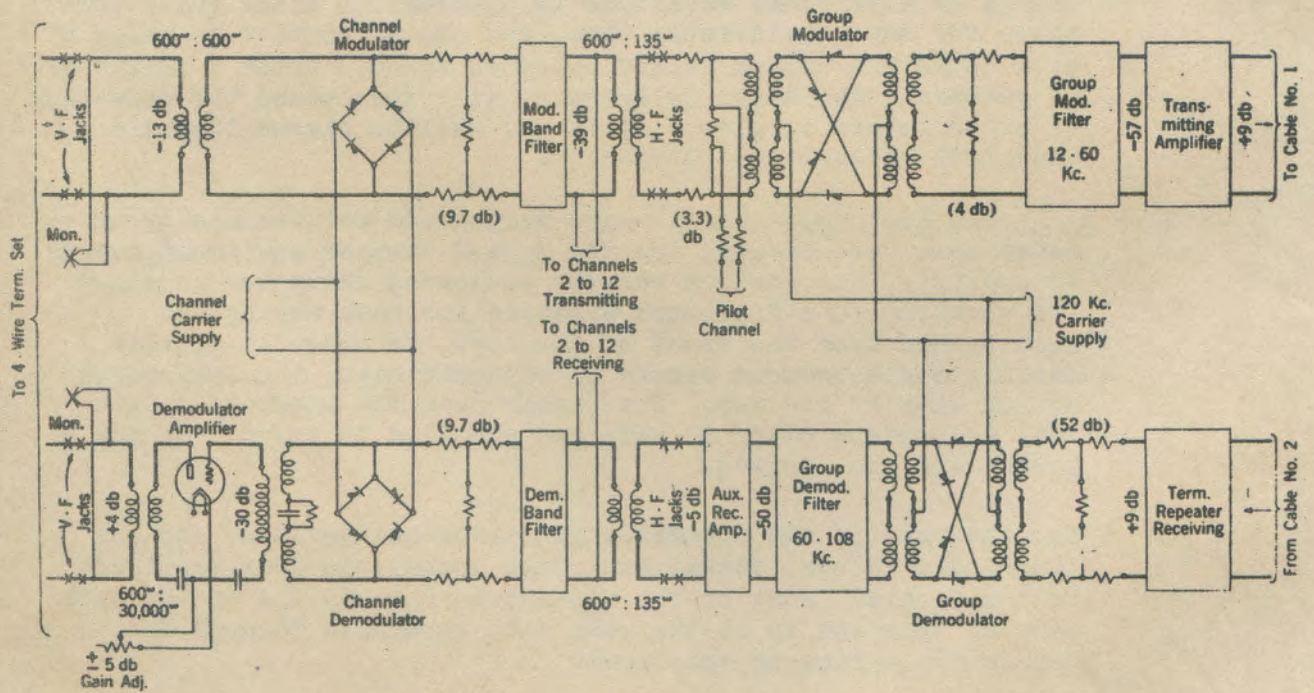

FIG. 11. TYPE-K CARRIER TELEPHONE TERMINAL

3.2 Features of the K system are:--

(1) Provision of 12 wide band speech channels derived from a 4 wire circuit.

(2) Operation over lines of high attenuation requiring high gain repeaters spaced at approximately 17 to 20 mile intervals depending on the gauge of cable wire.

(3) Negative feedback amplifiers are employed to provide the necessary stability.

(4) Includes a system of transmission regulation wherein large variations in attenuation differing at each frequency are automatically corrected to a high degree of accuracy.

(5) New methods of crosstalk and noise reduction are employed. Small adjustable mutual inductance coils are connected between carrier pairs to balance out crosstalk, or alternatively capacitance neutralisation is used.

(6) The high speed transmission minimizes delays and echoes.

(7) In some instances unattended auxiliary repeater stations are employed between attended repeater stations.

3.3 The circuit arrangements of the individual units of this system are similar to the units described previously for the Type J system. Fig. 12 shows a block schematic diagram of the terminal equipment of a type K system, and one of the channels and the group modulating equipment is shown in more detail in Fig. 13. Referring to Fig. 13, the 2 wire/4 wire terminating unit serves to connect the 2 wire voice frequency circuit to the 4 wire carrier circuit. This unit rejects unwanted frequencies such as telegraph harmonics, 50 cycle power, and 16 cycle ringing frequencies. In the transmit direction the input is applied via attenuator pads to the channel modulator (input level -13 decibel). The modulator produces both sidebands and the lower sideband is selected by the crystal channel band filter. This sideband, together with 11 others, is then applied to the group modulator. The pilot frequencies are also injected at this point. The pilot frequencies are only used to check levels at repeaters and receiving terminals and are respectively 15.9, 27.9, and 55.9 kC's, the transmitted level in each case being 20 decibel below a milliwatt at a point of zero level. After group modulation, the frequency group now in the range 12-60 kC. is applied to the transmitting amplifier (3 stage negative feedback) and, after amplification, is applied to the cable wires at a level of +9 decibel per channel.

/ 3.4

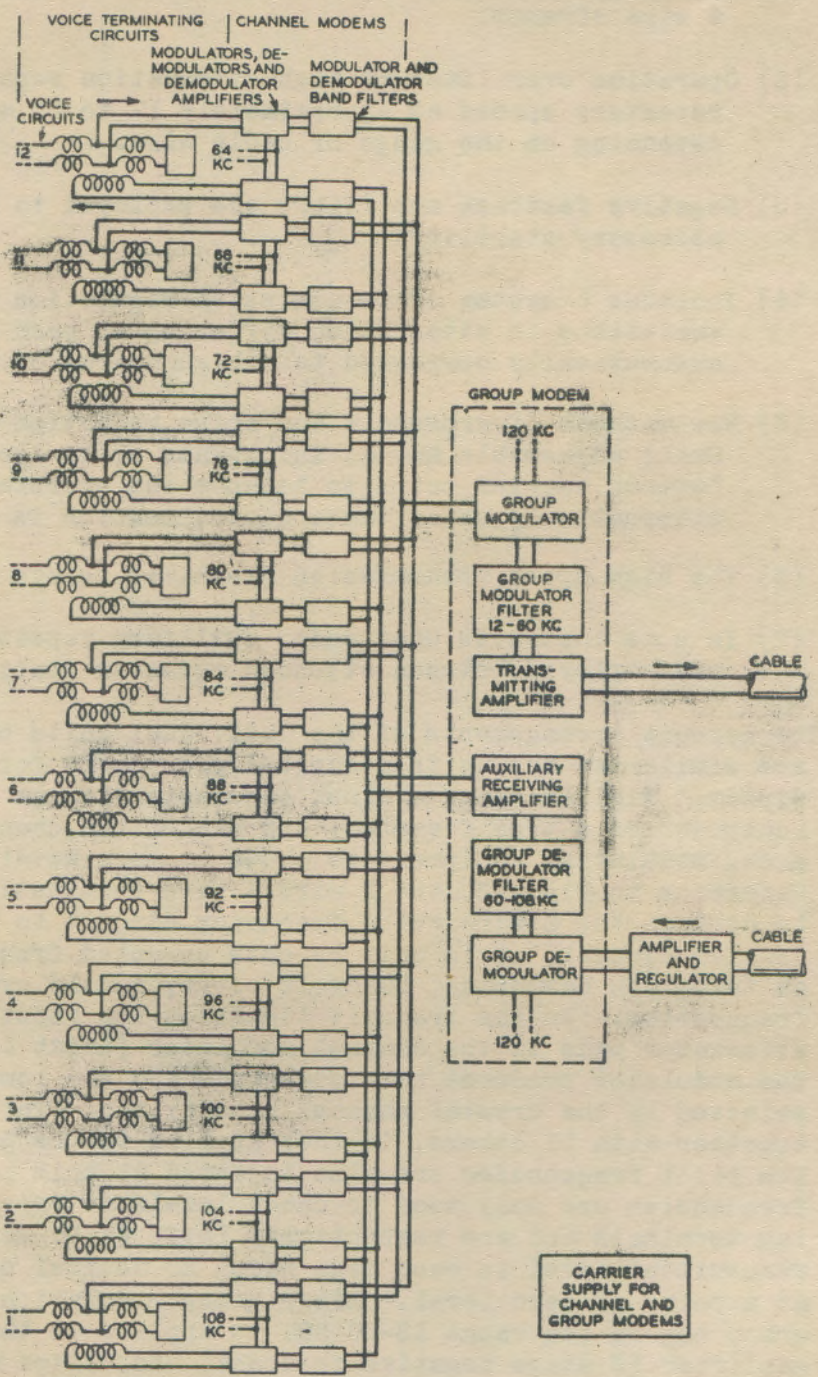

TYPE K CARRIER SYSTEM (CABLE WIRES).

FIG. 12.

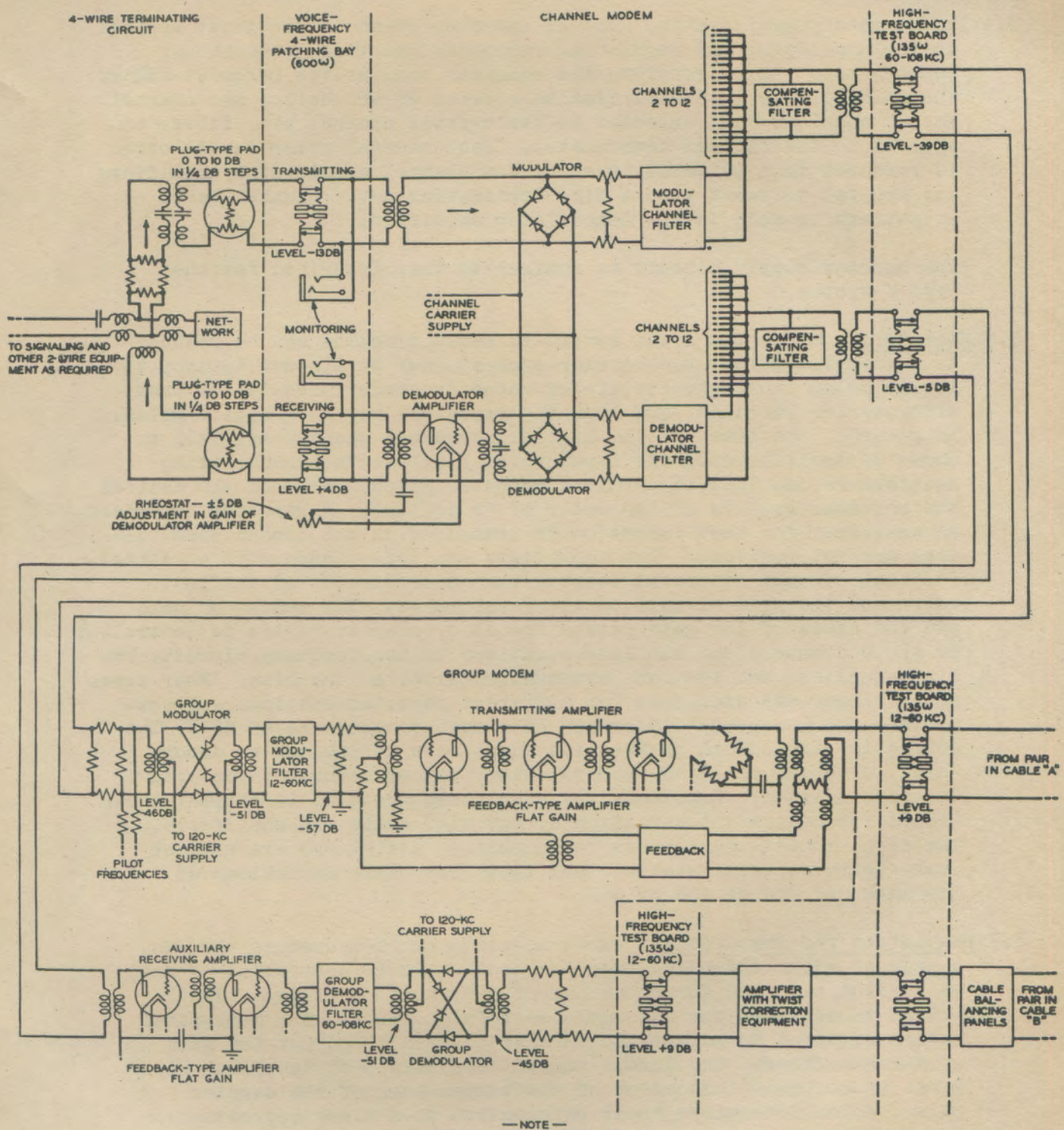

TYPE K CARRIER SYSTEM.
SCHEMATIC CIRCUIT.
FIG. 13.

3.4 In the receiving direction, the 12 incoming channels are first applied to the amplifying and regulating equipment and then to the group demodulator. This transfers the channels back to the range 64-108 kC. The channels are then amplified to a level of -5 decibel per channel. Each channel is then selected by its crystal channel band filter and applied to the channel demodulator. Each channel after demodulation is restored to a suitable level by the channel demodulator amplifiers and applied to the 2 wire/4 wire terminating set. Channel level adjustment is made in the demodulator amplifier.

The carrier supply circuit is similar to that described for the Type J system.

3.5 Repeaters. Since the noise levels in cable circuits can be reduced to a very low value, the carrier currents may be allowed to drop to levels below those permissible on voice frequency circuits or open wire carrier circuits, and thus the repeaters may have higher gains. In general, the level of the highest frequency channel may fall to about 60 decibel below the input voice level at the transmitting switchboard, so that to permit a repeater output level of +10 decibel the repeater gain is of the order of 75 decibel. A repeater comprises an amplifier for each direction of transmission but directional filters are not required. The amplifiers are three stage with equalised feedback circuit connected between the anode circuit of the last valve and the grid circuit of the first valve. The amount of gain and the slope of the gain versus frequency characteristic is controlled by the condensers and the line equaliser in the feedback circuit. The line equaliser has the same attenuation slope as the line. Four types of equaliser are available for different repeater spacings and compensate for frequency distortion at a mean temperature of 55°F. The correction introduced by the line equalisers is subject to errors which, although small at each repeater, become important for long distance systems. Supplementary equalisers are used to correct these errors. Two types of deviation occur, viz. cable and amplifiers. The supplementary equalisers for amplifier deviations are used at every tenth repeater station, and those for cable deviations at distances of 300 to 400 miles.

3.6 Regulation for Temperature. To compensate for temperature changes, a pair of wires extending over the section to be controlled is used as a pilot wire and forms one arm of a Wheatstone Bridge. The bridge is designed for automatic self-balancing and the mechanical motion required to adjust the balance is used to adjust the gain of the amplifier. The direct current resistance of the pilot wire gives an accurate indication of the temperature of the carrier pairs, which determines their attenuation to a close approximation. The motion of the bridge mechanism is communicated to the repeater amplifiers by means of self-synchronizing motors, a master motor being associated with the bridge and an individual motor with each amplifier.

/ 4.

4. SYDNEY-MAITLAND CABLE CARRIER SYSTEM.

4.1 These paragraphs will provide some information about other types of Cable Carrier Systems which have been installed on the Sydney-Newcastle-Maitland route. These systems provide 9 or 17 channels per 4 wire circuit.

4.2 The cables used are 12 quad 40 lb. special carrier type star quad, the make up being similar to trunk type star quad. The essential differences are lower mutual capacity, mutual capacity deviation, and capacity unbalance limits. The principle of operation of this system may be followed by the aid of Fig. 14.

4.3 Carrier Telephone Channels. The signals generally pass via the combined distributing frame and the trunk test boards to the various bays. The speech frequencies pass through the hybrid transformer and via an impedance matching transformer, enter a high-pass filter which attenuates frequencies below 250 cycles per second, enabling the application of carrier dialling.

Between the impedance matching transformer and high-pass filter, a limiter is connected in parallel, consisting of a high impedance transformer and a set of dry rectifiers. All these parts described above are mounted on the channel amplifier bay; inter-bay wiring now carries the speech frequencies to the filter-modulator bay.

There are two types of filter-modulator bays, one for 9-channel systems and the other type for 17-channel systems. In principle they are the same, with the exception that prevention of cross-talk necessitates low-pass filters before the modulators and after the demodulators for the 17-channel system, whereas there is no such necessity for the 9-channel system. In this case, however, low-pass filters are provided for the two lowest channels to prevent carrier leak (the carriers of these channels being audible) into the hybrid transformers.

The carrier frequencies of the 9-channel system are 4, 12, up to 68 kC. giving a spacing of 8 kC. between adjacent carriers. For the 17-channel system they are 4, 8, 12 up to 68 kC., a carrier frequency spacing of 4 kC/sec. For this reason the band-pass filters for 17-channel systems are more complicated than those for the 9-channel system. As can be seen, all carriers are multiples of 4 kC. In both systems only the upper sideband is transmitted.

On the filter modulator bay, the speech frequencies pass a low-pass filter, and then enter the modulator. The modulator is of the dry rectifier type and balances out the carrier. After modulation, the modulated signal passes to a band-pass filter, the output of all "send" band-pass filters of one system being

/ connected

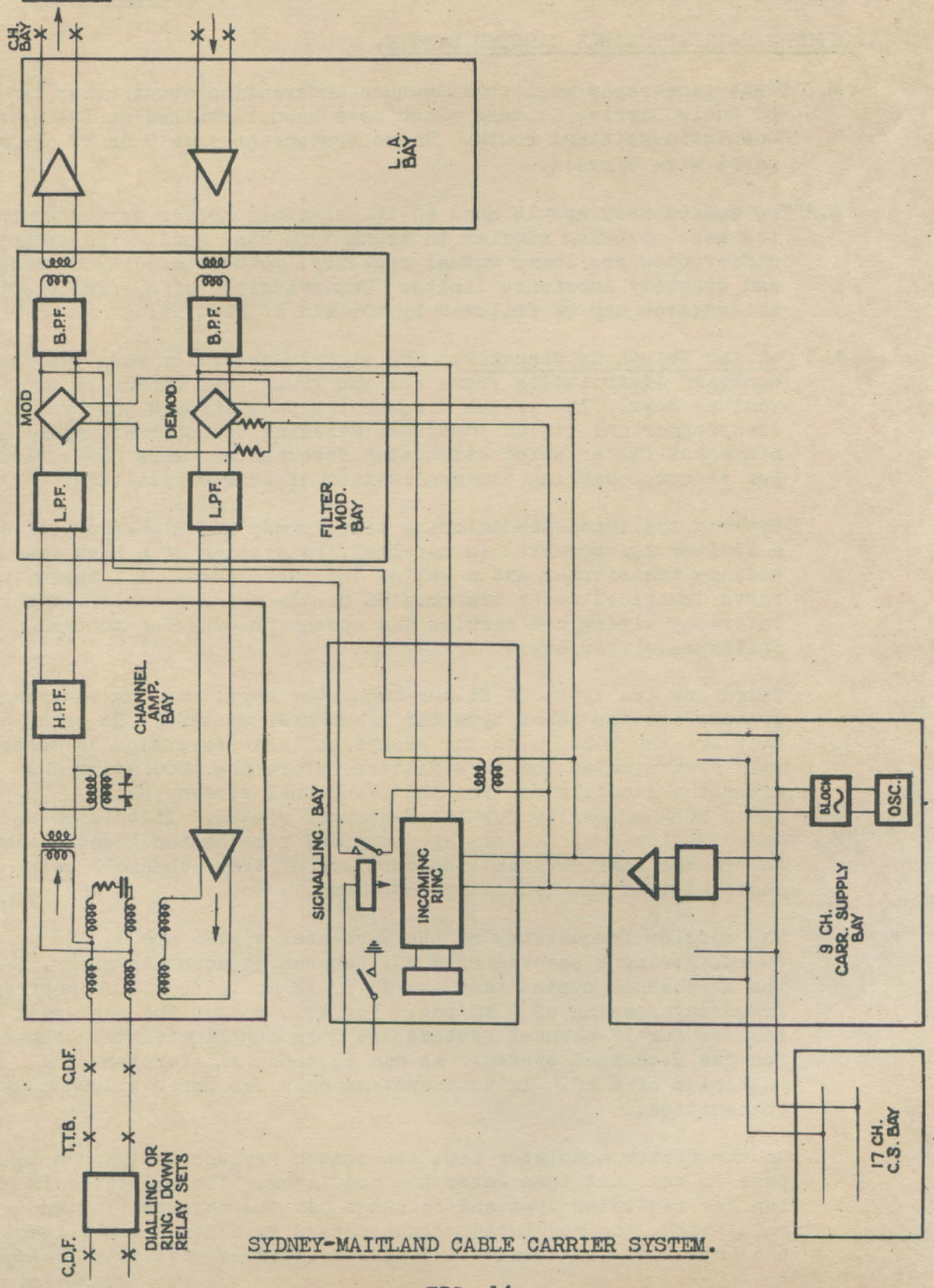

SYDNEY-MAITLAND CABLE CARRIER SYSTEM.

FIG. 14.

connected in parallel. The combined upper sidebands of the whole system now pass through a 1:1 transformer and go via a balanced pair to a line amplifier bay. On this bay the signal passes via another 1:1 transformer to an unbalanced "send" equaliser which is, however, only used if it is necessary to compensate for a total cable length somewhat longer or shorter than originally calculated. The signals are then amplified in a common amplifier, the output of which is connected to the cable head bay, on which bay the circuits are connected via a U-link tablet to the cable.

In the receiving direction (see Fig. 14) the incoming cable is connected to the cable head bay, and from there to the line amplifier bay. The output of the line amplifier is connected to the filter modulator bay where signals pass via a 1:1 transformer to the unbalanced "receive" band-pass filters, the inputs of which (for each system) are again connected in parallel. The band-pass filters separate the upper side bands of the various channels, and their outputs are connected to demodulators. The demodulators are similar in design to the modulators. In the demodulator the signal is demodulated and the low frequencies now leave the bay (in 17 channel systems via a low-pass filter, as described previously).

The speech frequencies are now amplified by a voice frequency amplifier, mounted on the channel amplifier bay. The output of each channel amplifier is connected to a hybrid transformer and from there the signal goes via the local C.D.F. to the trunk switchboard.

4.4 Carrier Supply Bay. One essential bay for the carrier telephone channels remains to be described, namely, the carrier supply bay. On this bay, the carrier frequencies to supply the modulators and demodulators are generated. As mentioned before, all necessary carrier frequencies are multiples of 4 kC. This fact enables all the carriers to be generated from one oscillator with a base frequency of 4 kC. The output is fed into a "blocking" oscillator, the output of which consists of the required multiples of the basic frequency at approximately equal levels. The outputs are separated by carrier filters and then pass to carrier amplifiers.

The carrier amplifiers are connected to the corresponding modulators and demodulators. The amplifiers are heavily voltage back-coupled, and hence have a very low impedance. The output power is sufficiently high to enable all modulators and demodulators of the same frequency in a station to be fed from one carrier amplifier, the low output impedance of the common amplifier preventing crosstalk. Because of the extreme importance of the 4 kC. base oscillator and blocking oscillator, these two units are duplicated with automatic switch-over facilities in case of failure of the working set. / The

The modulating and demodulating frequencies of any one channel must be the same. This has been achieved by synchronising the 4 kC. oscillators in all stations from one oscillator, generally the oscillator at Sydney. For this purpose a multiple of the synchronising oscillator frequency (76 kC.) is sent out over the line. At the receiving end, the 76 kC. frequency is modulated with a frequency of 72 kC. (multiple of the local oscillator output) and the resulting 4 kC. synchronises the local oscillator. All synchronising units, together with an indicator panel, are mounted on the carrier supply bay.

On the carrier supply bay, carrier filters and amplifiers for 9-channel systems are mounted; if the station is also provided with 17-channel systems, an additional carrier supply bay, equipped with the additional eight carrier filters and amplifiers is necessary.

4.5 Dialling Facilities. The last item to be mentioned in relation to the telephone channels is the dialling facilities. Signalling relay groups to work in conjunction with carrier dialling are used on these telephone channels. The carrier dialling system, as the name indicates, uses the carrier for dialling. As described previously, the carrier frequencies are balanced out in the modulator and demodulators. The carrier frequency, however, is now injected into the band-pass filters in pulses corresponding to the dial pulses sent out by the subscriber. The power is sufficiently low to obviate the danger of overloading the line amplifiers.

The carrier pulses traverse the equipment and the cable as described for the speech frequencies. At the receiving end of the line, the carrier pulses are converted to D.C. pulses again. This is achieved in the carrier signalling receiver, mounted on the carrier signalling bay. In this receiver the carrier pulses are modulated with an appropriate frequency to give an 8 kC. output. This 8 kC., in pulses corresponding to the dialling train, is passed through a very narrow band-pass filter to prevent false operation. It is then amplified and rectified to operate a "receive" relay. The carrier frequencies are all available from the carrier supply bay, so no additional carrier supply apparatus is necessary.

An advantage of this system is that it is independent of speech and in addition, the narrow band-pass filter and a high-pass filter in the send circuit eliminate interference from signalling tones. Another advantage is that it is a 4-wire system, the sending and receiving sides being entirely separate from each other.

/ 4.6

4.6 Voice Frequency Channels. Some sections of the Sydney-Maitland Cable will not need carrier systems, at least for the time being, so ordinary four wire voice frequency equipment is used on these lines. Voice frequency channels are also provided on several phantom circuits. The voice frequency amplifiers are similar to the channel amplifiers.

The input signal passes via a hybrid transformer and impedance matching transformer to the send voice frequency amplifier (all on the voice frequency amplifier bay) and from there to the line. At the receiving end, the signal passes via a transformer to the receiving equaliser, and then to the receiving voice frequency amplifier and leaves the bay via the hybrid transformer. Facilities for by-passing the amplifiers are provided in cases where low frequency ringing is used.

When sending to stations, where a power supply is not available, and, therefore, a receiving amplifier cannot be installed, a send equaliser and high level send amplifier are used.

4.7 Voice Frequency Telegraph Systems. A number of 9-channel 240 cycle spacing V.F. carrier telegraph systems, each operating over a 9 or 17 channel bearer circuit, are provided.

4.8 Programme Channels. A programme channel covers a frequency band of 35 cycles per second to 10,000 cycles per second and, therefore, occupies two 9-channel-system telephone channels or three 17-channel-system telephone channels. A number of these systems are also being provided.

4.9 Power Plant. The power required for the bays is as follows:--

200 volt D.C. for anode supply, obtained from a 200 volt battery kept in floating condition by a valve rectifier or a motor-generator.

24 volt or 48 volt D.C. for alarm circuits, relay operation, carrier signalling, and telegraph circuits. This is supplied by a battery kept in floating condition by a selenium rectifier.

A small 48 volt battery is also provided (floating across a selenium rectifier) for telegraph working.

The filament supply is 4 volt A.C., which is obtained from the 240/415 volt mains supply via transformers mounted on panels above the various bays.

A comprehensive system of alarms is provided on the power plant control cubicle.

/ 4.10

4.10 Emergency Facilities. In case of mains failure, the normal 200 volt battery and 24 volt battery supply the system for a considerable time (approximately 10 hours). A motor-alternator which is driven by a spare 200 volt battery enables the 240 volt A.C. supply to be restored in three seconds.

In those stations where there is a possibility of the power supply being interrupted for any length of time, there is an additional emergency supply in the form of a diesel engine with which is coupled an alternator. The diesel is automatically started by a mains failure and takes over the station load within a few seconds.

Even if the diesel fails to start, the 240 volt A.C. supply is assured for approximately three hours by the battery-driven motor-alternator. This latter 200 volt battery when not in use is kept fully charged by a trickle charger, and is re-charged after having been in use by a second valve rectifier or motor-generator. The 24 volt diesel starter battery is re-charged after use by the diesel starter motor acting as a dynamo.

The spare 200 volt battery can be used for supplying plate voltage should the normal battery be taken out of service for any reason.

When valve rectifiers are provided they are always duplicated, the spare valve automatically taking over the load should the working valve fail. Should both valves fail, the load is automatically switched over to a spare rectifier set.

4.11 Miscellaneous Items.

Interbay Connections. The connections between the bays in a station are made via cabling on the run-ways above the bays. All connections to the bays are made to terminal blocks at the top of the bays.

Power Supply. The power supply including the earths is connected to busbars attached to the run-ways and thence to power terminal blocks on the bays. There are five busbars, for the 200 volt positive, 24/48 volt negative, and noiseless and noisy earths, the fifth being a spare.

The mains supply (240 volt A.C.) is brought via conduit on the run-ways to filament transformer panels above each bay requiring power, and is there converted to 4 volt A.C., which is connected to the bay terminal blocks.

Tappings are provided on the primaries of the filament transformers so that an output of 4 volts can be obtained in stations where the average main supply differs from 240 volts (the additional tappings are for primary voltages of 232 V., 248 V. and 258 V.).

/ Earthing.

Earthing. The negative terminals of the 200 volt batteries and the positive terminals of the 24/48 volt batteries are connected to earth at the power plant cubicles. Since much of the equipment is electrically unbalanced and in view of the extremely low levels involved, special care has been taken to avoid "noise troubles." Two separate earth leads to the equipment are provided via the noiseless and noisy earths. All earths which are likely to introduce interference are connected to the noisy earth, while plate circuit returns, screens, etc., go to the noiseless earth. The bay frames are insulated from the ground, from the run-ways and from each other and are then connected to the noiseless earth.

The two earth leads are connected together at the power plant and then go to the station earth-plate. Provision has been made for adding a choke in the noisy lead if it is found necessary.

Power plant framework, and runways go to a separate earth terminal marked "switchgear earth" which can be connected to a separate earth plate if necessary.

Valve Alarms. In series with the anode current of every valve are relays, and test resistances across which current measurements may be made. The relays remain energised while plate current flows, but should the anode current fall, the relay releases, lighting the corresponding valve alarm lamp, and operating a common alarm relay which extends the alarm, (each alarm relay common to a maximum of six valve alarm lamps).

External Alarm. The closing of any bay alarm circuit by a valve or fuse failure energises a relay which closes two external alarm circuits, one of which lights the bay alarm lamp on the filament transformer panel. The external alarm relays are in series with the corresponding alarm lamps on the bay. External alarms are of three types: non-urgent, urgent (urgent No. 2) and extremely urgent (urgent No. 1). The latter alarm is a special alarm for the carrier supply bay, the complete failure of which closes down the whole system.

Fuses. Three types of fuses are used: normal power fuse, alarm type indicating fuse and a special cartridge type indicating fuse on the filament transformer panel. The power fuses are in general rated at 2 amp. fusing current; the alarm types are 2/3 amp. (green pin), and the filament supply fuse is rated at 6 amp.

Measurement of Anode Current. A small resistance in the anode circuit of every valve enables anode currents to be read without interrupting the circuit, using a specially calibrated plug-in meter. These resistances have values of 17.86 ohms, 5.10 ohms or 2.53 ohms, corresponding respectively to the 15 mA., 50 mA., and 100 mA. scales on the meter.

/ Interposition

Interposition Trunks. In all stations a system of interposition trunks is provided enabling connections to be made from any one bay to any other bay. Six screened trunks are provided, these being divided into two groups (A and B) which are multipled to alternate bays in the station, irrespective of the type of bay. Both groups appear on the station measuring-bay. An additional group (c) of three unscreened trunks is multipled to all low-frequency bays and the station measuring bay.

Measuring Lines (T.M.S. Lines). On the line amplifier and carrier supply bays high and low level T.M.S. U-link sockets are provided on the U-link panels, whereby any equipment may be connected to a transmission measuring set. On the filter modulator bay and channel amplifier bay, T.M.S. jacks are substituted for these sockets. These connections will ultimately be extended to a measuring bay. All similar T.M.S. links or jacks on the same type of bay are connected together, but there is no such inter-connection between different types of bay.

5. TEST QUESTIONS.

1. What are the main points of difference between the Type J 12-channel carrier telephone system and 3-channel carrier telephone system?

2. What are the reasons for employing basic frequencies of 64, 68 - 108 kC. (4 kC. separation) for use in Type J carrier telephone systems?

3. What do you understand by the term "Group Modulation" as applied to wide band carrier systems?

4. Explain briefly the principles of generation of carrier frequencies in wide band carrier systems. What are the advantages of this method as compared with methods employed in 3-channel systems?

5. Explain briefly, with the aid of diagrams, the methods employed in the Type J system for regulating the gain of the system. Why, in your opinion, is gain regulation necessary?

END OF PAPER.

COMMONWEALTH OF AUSTRALIA.

Chief Engineer's Branch,
Postmaster-General's Department,
Treasury Gardens,
Melbourne, C.2.

COURSE OF TECHNICAL INSTRUCTION.

LONG LINE EQUIPMENT.

CARRIER TELEGRAPH SYSTEMS.

CONTENTS:

1. INTRODUCTION.
2. TYPE B CARRIER TELEGRAPH SYSTEM.
3. VOICE FREQUENCY TELEGRAPH SYSTEM.
4. COMPARISON OF TYPE B AND V.F. SYSTEMS.
5. TYPE R CARRIER TELEGRAPH SYSTEM.
6. SEND AND RECEIVE CARRIER LOOPS.
7. STATIC MODULATOR.
8. TELEGRAPH DISTORTION MEASURING EQUIPMENT.
9. TEST QUESTIONS.

1. INTRODUCTION.

1.1 Previous papers in this book have described the principles and applications of various carrier telephone systems, and this paper will provide some information on the use of carrier systems for the transmission of telegraph messages.

1.2 The first carrier telegraph system to be installed in the Commonwealth was a Type B ten channel system between Sydney and Melbourne in 1927, and today a large percentage of long distance telegraph circuits are operated over carrier telegraph systems.

/ 1.3

1.3 As the range of telegraph communication extended the necessity to utilize lines to the best advantage led to the development of two main systems of telegraphy - high speed systems and multiplex systems (described in Telegraphy II). High speed telegraph systems obtain increased output by using automatic telegraph transmitters which can be fed with perforated tape prepared in advance by a number of operators; multiplex telegraph systems on the other hand assign the line in turn to a number of operators thus obtaining high channel carrying capacity.

1.4 With the advent of carrier telegraph systems capable of subdividing a line or alternatively a speech channel into a large number of telegraph channels, at the same time offering greater flexibility and obviating the need to retain complicated mechanical apparatus, it became economical to assign one channel per operator on the basis of machine operation using teleprinter or teletype machines. The earliest carrier telegraph system - Type B - had sufficient channel bandwidth to take a quadruple multiplex machine telegraph system, and restricted bandwidth suitable for teleprinter-teletype-transmission was first introduced with voice frequency carrier telegraph systems.

.5 The voice frequency carrier telegraph system is adaptable for economical operation over telephone circuits by making use of the whole frequency band usually allocated for speech purposes, and thus requires transmission characteristics similar to those of the telephone speech channels. It may be said, therefore, that every advance directed towards an improvement in quality and performance of telephone circuits, such as improved bandwidth, better equalisation and regulation of circuits, reduction of interference and crosstalk, all contribute towards improved telegraph transmission, and enhance the usefulness of telegraphy not as a competitive but rather as a complimentary service to telephony. Thus, wherever telephone circuits are established, high speed reliable voice frequency telegraph channels can follow.

1.6 The first of the carrier telegraph systems in the order of development was the Type B High Frequency Carrier Telegraph System (see Fig. 1).

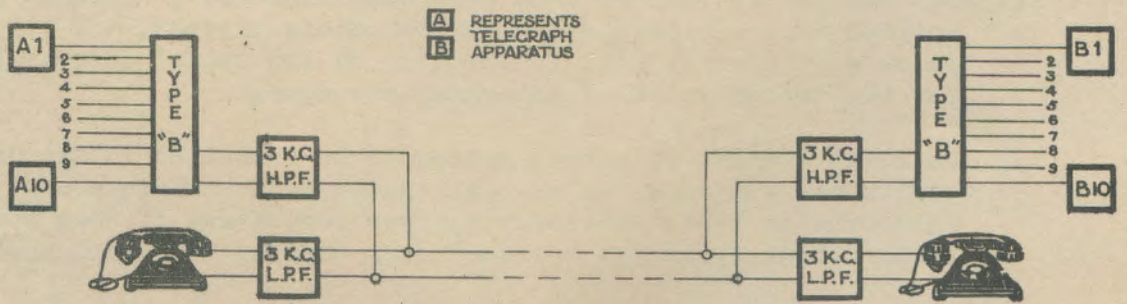

TYPE "B" CARRIER SYSTEM.

FIG. 1.

/ This

This system provides for superimposing ten two-way telegraph channels on an open wire pair, which may also be composited and used for ordinary grounded telegraph operation. Twenty carrier frequencies, ten for transmission in one direction and ten for transmission in the other direction are used. The separation between the carrier frequencies in the lower frequency channels is 240 cycles per second but increases in the higher frequency channels to a maximum of 500 cycles per second. These channels, which may be worked at the high speed of 100 bauds, are provided on the same pair of wires as the usual telephone channel and are most efficiently used when a high speed telegraph system, such as a Multiplex (4 arm), is worked over them. Each arm of the Multiplex may be worked at 45 words per minute and thus each channel will carry 180 words per minute, or 1800 words per minute for the 10 channels.

1.7 The next development in carrier telegraph working was the introduction of the Voice Frequency system, so named because the carrier frequencies of the telegraph channels lie within the normal voice frequency speech band. The general principles of operation of the Voice Frequency telegraph system are not essentially different from those of the Type B system, but due to the lower frequencies employed there is a considerable variation in the details of the apparatus used. Voice Frequency systems are generally operated over a carrier telephone channel. Under these conditions the transmitting medium is effectively a 4 wire circuit, and for reasons to be stated later a maximum of 18 duo directional simplex telegraph channels is obtained. A diagram of a Voice Frequency Telegraph System is shown in Fig. 2.

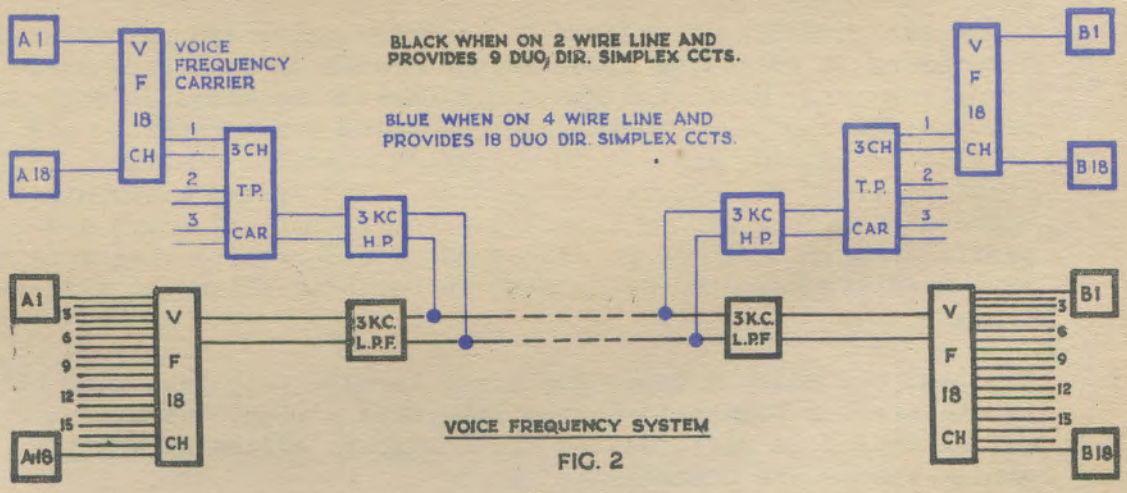

VOICE FREQUENCY SYSTEM

FIG. 2

1.8 The general principles of carrier operation have been explained in other papers in this book, and these principles apply to the various types of carrier telephone and carrier telegraph systems in use.

/ 2.

2. TYPE "B" CARRIER TELEGRAPH SYSTEM.

2.1 The Type "B" carrier telegraph system was designed to furnish on one pair of wires ten independent (duo directional simplex) telegraph circuits or channels without interfering with the normal use of the wires for ordinary telephone or direct current telegraph purposes. The carrier telegraph channels employ a frequency band extending from 3,300 to 10,000 cycles per second, and the system is adapted for operation at these frequencies over non-loaded open wire composited or non-composited lines.

2.2 Carrier telegraph, as well as carrier telephone, systems, employ alternating currents of different frequencies to provide for the transmission of several messages simultaneously over the same pair of wires without interfering with each other or with the normal telephone and telegraph circuits on these wires. In the telegraph systems the alternating current or carrier current of a channel is interrupted to form the signalling characters just as a direct current is interrupted in a simple telegraph circuit. The various messages can be separated from each other at the receiving end because in the Type B system each frequency is capable of being selected from all of the others by means of an electrical selecting circuit commonly known as a "tuned circuit." To permit interconnection in the plant, relays or their equivalent (viz. static modulators, which are described later in this paper) are employed at the transmitting end, connected by means of direct current circuits to the sending operators' keys, machines or transmitters. At the receiving end the carrier currents after rectification are caused to operate polarised telegraph relays which subsequently control the receiving sounders or printers.

2.3 In the earliest Type B systems the carrier telegraph channels terminated in unit type floor mounted racks or panels. Later types, however, have rack mounted apparatus as shown in Fig. 3. These carrier panels provide loop circuits for connecting the carrier telegraph channels to telegraph circuits equipped with standard types of telegraph apparatus. The system is arranged to operate on a full duplex (duo directional simplex) basis and provides separate loops for the sending and receiving equipment, thus enabling messages to be sent in both directions at the same time.

The send and receive loops are wired through patching jacks both in the carrier terminal and the telegraph office, but all patching and switching is performed by the telegraph office unless the circumstances are unusual.

2.4 The type "B" carrier telegraph system is designed to be operated on a "grouped" frequency basis, that is, when a full quota of channels is installed the first group of ten one-way channels employs a frequency range from 3,330 to 5,500 cycles per second and

/ takes

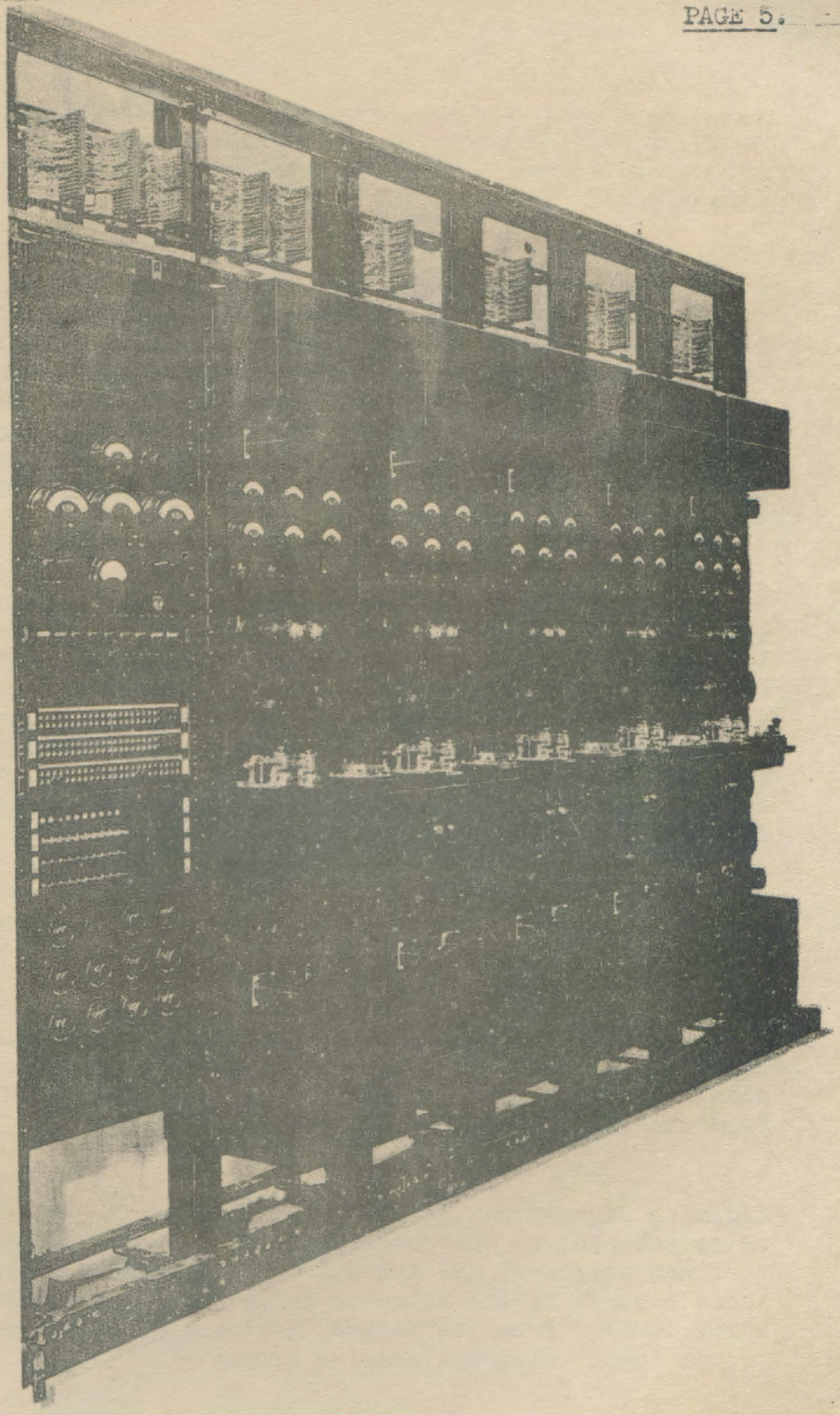

TYPICAL RACK MOUNTED 10 CHANNEL TYPE B CARRIER TELEGRAPH SYSTEM.

FIG. 3.

takes care of ten messages in the B to A direction. The second group of ten one-way channels employs a range from 6,500 to 10,000 cycles per second and handles ten messages in the A to B direction.

2.5 As the frequencies used in the Type B system are above the commercial voice frequency range it will be seen that, with the aid of normal High and Low Pass Line Filters having a 3000 cycles cut off, the Type B system can be superimposed on a telephone circuit without interfering with the normal use of the line for voice frequency telephone and composite telegraph working. Fig. 4 shows the normal line filtering arrangements and the essentials of a Type B Carrier Telegraph System, and Fig. 5 is a diagrammatic sketch of a complete system.

2.6 The channel equipment at the sending end consists of an oscillator generating the required frequency, a send relay or static modulator, a single stage amplifier and a sending tuned circuit. For receiving incoming signals a receiving tuned circuit, a two-stage amplifier, a detector and a receive telegraph relay are provided. In setting up the channels the sending oscillator and tuned circuit are set to the correct frequency, and at the far end the corresponding receiving circuit is tuned accurately to that frequency from the received carrier current itself.

2.7 Circuit Operation. (See Fig. 4.) The carrier current which is an alternating current generated by the oscillator is connected to the amplifier and until interrupted to form the telegraph signals is continuously transmitted to line via the sending tuned circuit and line transformer. The oscillator output is intermittently blocked by the operation of the sending relay or static modulator which is controlled by direct current telegraph signals from the send telegraph loop.

Incoming signals, which are pulses of carrier frequency, after being selected by the proper receiving tuned circuit, are amplified and detected, and the pulses of rectified current in the anode circuit of the detector valve operate the carrier receive relay, which, from its tongue, delivers double current signals to the local telegraph receive loop.

/ 2.8

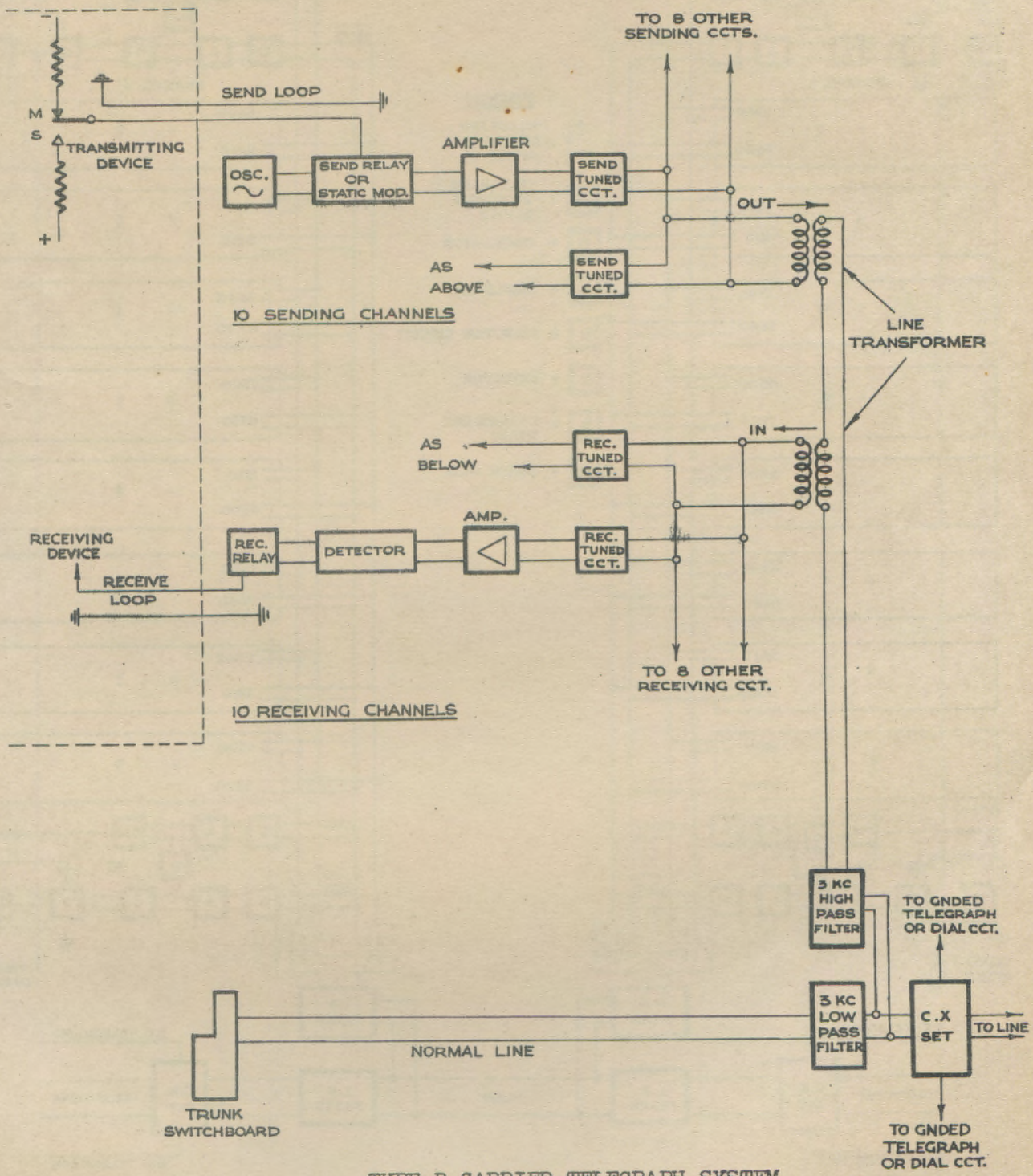

TYPE B CARRIER TELEGRAPH SYSTEM
(10 DUO DIRECTIONAL SIMPLEX CHANNELS)

FIG. 4.

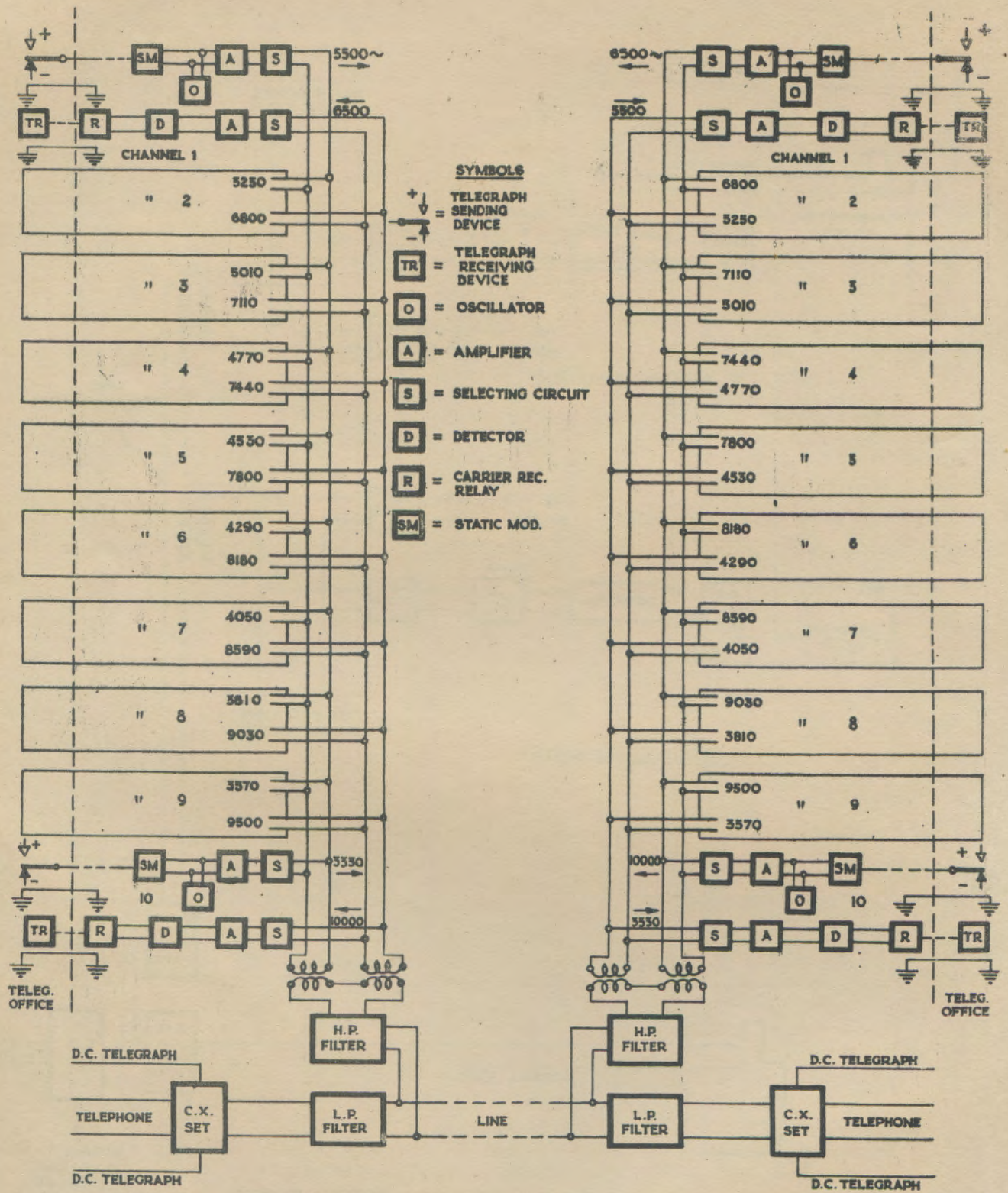

TYPE B CARRIER TELEGRAPH SYSTEM.

FIG. 5.

2.8 Frequency Allocation on Line. Fig. 6 shows the frequency allocation on a line equipped with composite telegraph circuits, a voice frequency speech circuit and a Type B carrier telegraph system.

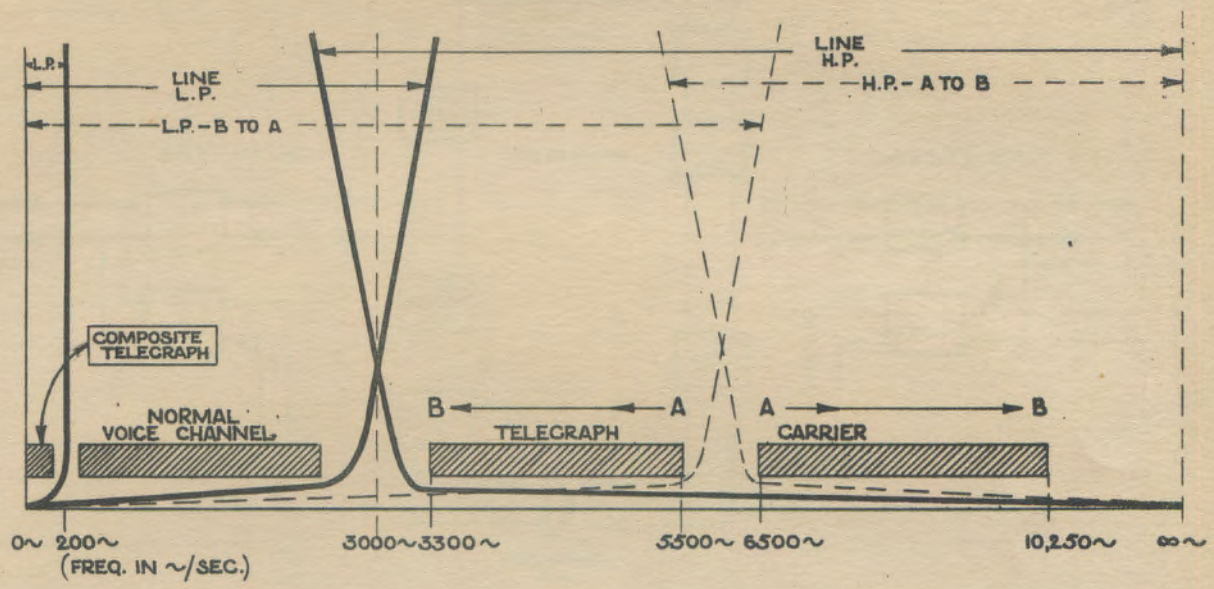

FIG. 6.

The normal line filter group divides the spectrum at about 3 kC. per second, the low pass filter passing all frequencies below 3kC., including direct current if necessary, and the high pass filter passing all frequencies above 3 kC. per second. The composite set or telegraph filter cuts in on the lower end of the voice range and extracts frequencies from zero (direct current) to about 80 cycles per second for direct current telegraph working on each leg of the line. The C.X. (composite) filter rejects voice frequencies above 200 cycles per second on the telegraph side and excludes telegraph signals from the voice or carrier paths. This filter could be on either side of the L.P. filter, but being of robust construction it is usually installed on the line side. The filters shown by broken lines in this sketch are only used at carrier repeater stations.

2.9 Type B Repeaters. When a Type B system is operated over long distances repeaters are required at intervals, and the alternating currents of all the carrier channels associated with one direction are amplified together in one thermionic valve amplifier.

/ Repeaters

Repeaters used for carrier telephone and carrier telegraph systems are similar, the differences being in the directional filters and equalizers. Fig. 7 is a block schematic of a repeater station in a Type B system.

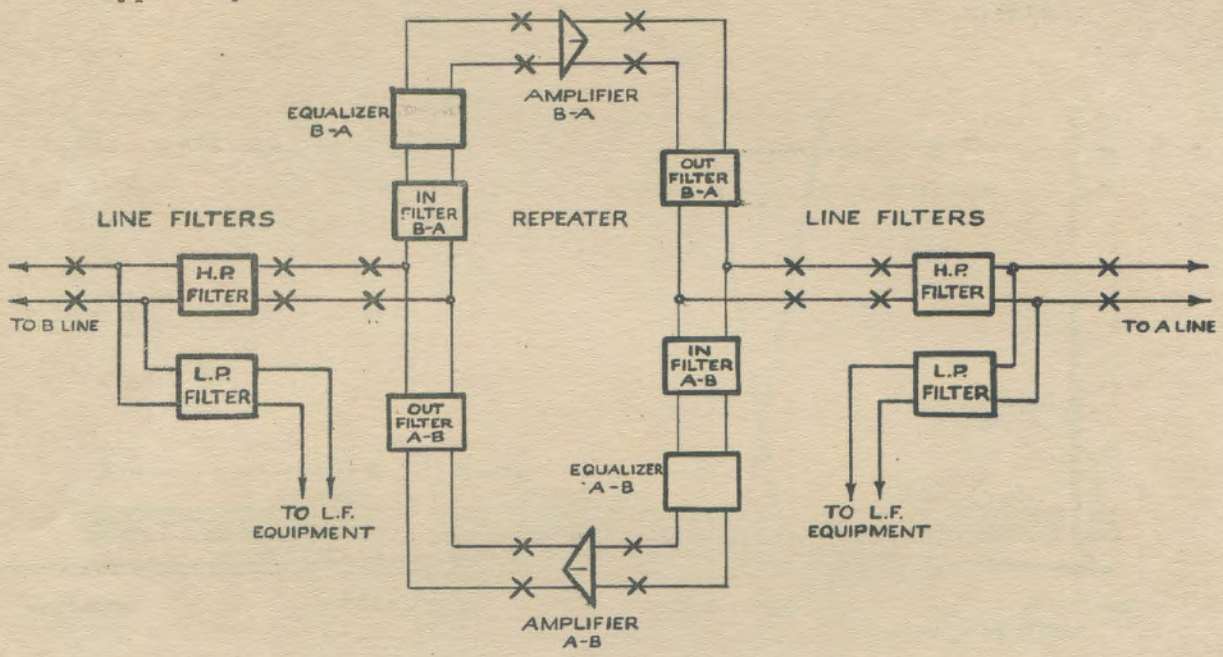

TYPE B CARRIER TELEGRAPH REPEATER.

FIG. 7.

2.10 The Type B system uses valves of the 101D and 102D types. The sending oscillator and amplifier each use a 101D valve. The receiving amplifier employs two 102D valves, and the detector a 101D valve. These valves have been described in Paper 1. The send and receive sides of any one channel are mounted close together and all five valve filaments are connected in series, the filament current being controlled by a filament rheostat. The carrier receive relay is the 209 FA type or its equivalent arranged to plug into a relay socket to facilitate replacement when a relay is suspected of being faulty. A relay adjusting table forms part of each installation.

2.11 Type B systems are at present operating between some capital cities, the equipment including both the earlier floor units and the more recent rack-mounted channels. The latter are electrically almost identical with the former, but have a limited range of frequency adjustment. The floor type can be tuned to any frequency in either range.

/ 3.

3. VOICE FREQUENCY TELEGRAPH SYSTEM.

3.1 This system transmits telegraph signals as impulses of alternating current, the frequency of which lies within the normal commercial voice range. As each telegraph channel operates on a narrow frequency band, a number of circuits can be obtained within the limits of normal speech frequencies. The system can, therefore, be applied to any physical or carrier telephone channel. Fig. 8 shows a typical Voice Frequency Carrier Terminal.

3.2 The frequencies used are the odd multiples of a base frequency of 60 cycles per second in the range 420-2460 cycles per second. Reasons for the adoption of this frequency grouping are as follows:-

(1) The average telephone channel has an approximate linear frequency response between 300 and 2,700 cycles per second, and this consideration sets the lower and upper limit to the choice of telegraph carrier frequencies for V.F. systems which must be capable of operating over a normal telephone circuit.

(Carrier telephone channels complying with the revised C.C.I.F. specification for increased bandwidth 300-3,400 cycles per second are now being introduced in the plant in Type J open wire 12 channel systems and in cable carrier systems. It will be appreciated that V.F. systems operated over channels of this bandwidth can be extended to an upper limit of 3,180 cycles per second, thus permitting the derivation of 24 to 26 telegraph channels from one telephone circuit.)

(2) The required telegraph transmission speed decides the bandwidth required for each channel. Although normally used for teleprinter working (50 bauds), V.F. systems are designed to cater for a transmission speed of 66 bauds. This provides a margin over the required speed of 50 bauds and permits the connection of 2 or 3 channels in tandem.

In V.F. systems the channel carrier frequency is modulated with a low frequency (up to 25 cycles per second) for teleprinter transmission. It is usual to transmit the carrier and both sidebands, as it would be exceedingly difficult in the small bandwidth available to design channel band pass filters with sufficiently sharp cut off to eliminate the carrier and one side band. Moreover in telegraph transmission wave front distortion is of primary importance and correct phase relationship between carrier and sideband is essential. With the carrier in the centre of the transmission band the phase compensation is automatic. If the carrier were suppressed, it would involve reintroduction at correct frequency and phase at the distant terminal with consequent synchronisation and phase correction adjustments.

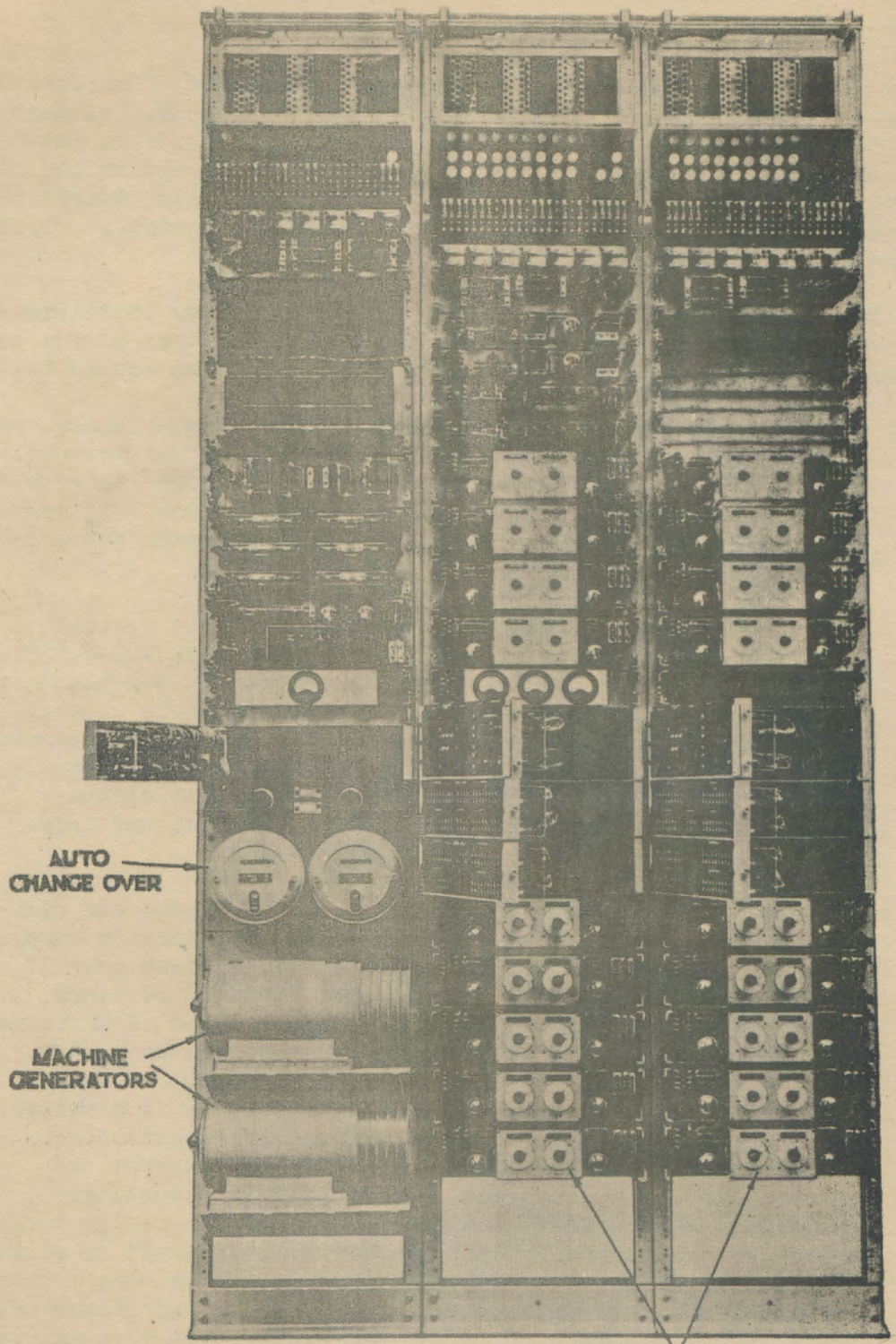

18 CHANNEL VOICE FREQUENCY CARRIER TERMINAL.
(Covers Removed)

FIG. 8.

As the channel carrier frequency and both sidebands are transmitted an effective bandwidth of 33 cycles per second each side of the carrier frequency is required. In practice the channel width must be approximately twice this value to give a margin for filter design and allow the filter pass band to be approximately linear over the required frequency band.

(3) The actual frequencies adopted were chosen with a view to preventing interchannel interference which may occur due to non-linearity of loading coils, amplifiers etc. With regard to interference frequencies, those of greatest magnitude are the 2nd harmonics and simple sum and difference products of any pair of carrier frequencies.

By choosing a basic frequency and using the odd multiples the sum and difference products will always be even multiples and these then lie midway between the carrier frequencies, that is, at a point where the stop band characteristic of the channel band pass filters has maximum attenuation.

3.3 The telegraph channels are 120 cycles apart and thus a maximum of 18 duo directional simplex telegraph channels can be derived from a four wire circuit. If the telephone channel on which the voice frequency telegraph system is superimposed is a two wire circuit, it is possible to derive only half this number of channels, viz., a maximum of 9 channels, as in this case different telegraph carrier frequencies must be employed for transmission in each direction. Notes on two and four wire channels will be found in Paper 7 of this book.

3.4 Circuit Application. Whilst the frequency range of V.F. systems permits their application to normal 2 wire or 4 wire voice frequency circuits derived from open wires or cable pairs, they are generally operated over and absorb a carrier telephone channel. This is largely due to the fact that carrier telephone circuits exist between the centres where telegraph facilities are required and, in addition, are more stable and have a lower overall equivalent than the corresponding physical circuit. It is likely that future extension of 4 wire voice frequency circuits in cables will be followed by the derivation of V.F. circuits therefrom.

Except in special circumstances V.F. systems are operated over 4 wire circuits because they employ the same frequencies for each direction of transmission. If they are applied to a 2 wire circuit the number of derived channels, as stated previously, is halved, thus, in an 18 channel system 9 different frequencies have to be employed in each direction. Moreover, it is usual to delete the mid-channel for hybrid or directional filter discrimination purposes so that only 8 duo directional simplex channels are obtained.

/ The

The various circuit applications are:--

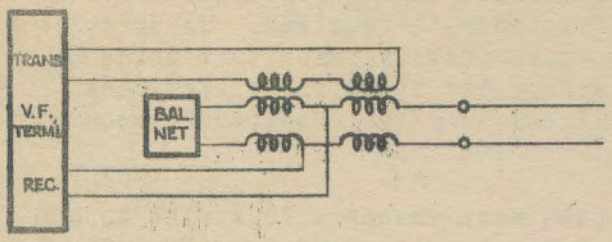

1. Two wire voice frequency physical circuits operating over aerial or cable wires, providing a maximum of 9 duo directional simplex telegraph channels.

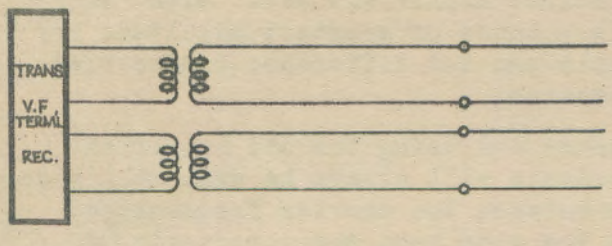

2. Four wire voice frequency physical circuits operating over aerial or cable wires, providing a maximum of 18 duo directional simplex telegraph channels.

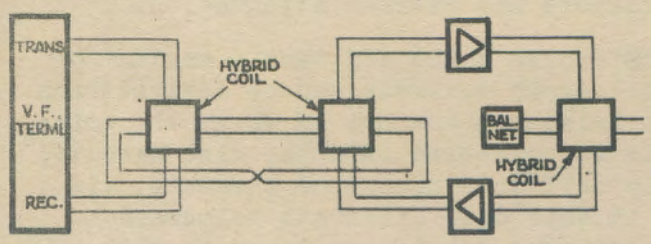

3. Two wire voice frequency physical circuits operating over aerial or cable wires and equipped with intermediate or terminal amplifiers, providing a maximum of 9 duo directional simplex telegraph channels.

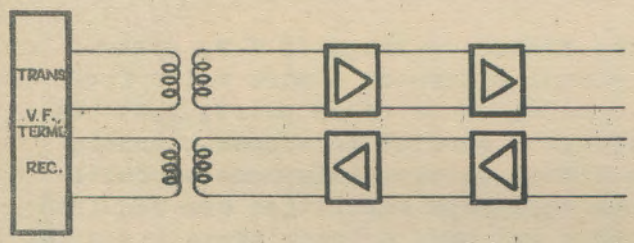

4. Four wire voice frequency physical circuits operating over aerial or cable wires, providing a maximum of 18 duo directional simplex telegraph channels.

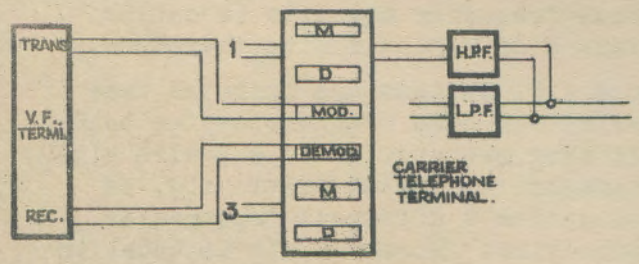

5. The transmit and receive paths of a carrier telephone channel, providing a maximum of 18 duo directional simplex telegraph channels.

/ 3.5

3.5 Voice Frequency systems, as stated earlier, are generally operated over a carrier telephone channel and, as under these conditions the transmitting medium is effectively a four wire circuit, the same telegraph frequencies are used for transmission in each direction and a maximum of 18 duo directional telegraph channels is obtained.

3.6 Before applying a voice frequency system to a telephone circuit it must first be ascertained that the telephone circuit can transmit the frequencies involved without excessive attenuation. In general, a line equivalent not exceeding 20 decibel at a frequency of 3 kC. per second will be satisfactory. This is equivalent to a distance of 250 miles on a 200 lb. copper wire circuit not equipped with amplifiers. If, however, there are no severe restrictions on the sending level, systems can be operated over distances of 300 to 350 miles.

3.7 When operated over a 4 wire telephone circuit derived from a carrier telephone system the distances over which a voice frequency telegraph system can be operated are limited only by the spacing of the carrier telephone terminals. It is interesting to note that some voice frequency systems in use are operating over distances exceeding 1000 miles.

3.8 The apparatus included in a voice frequency telegraph system, as shown in Fig. 9, is similar to that employed in the Type B system. Signals from the telegraph office control the flow of channel frequency in such a way as to produce impulses of this frequency in a code corresponding to the transmitted telegraph intelligence. Thus, when a marking signal is applied, a pulse of carrier current corresponding to this marking signal is transmitted to line. At the receiving end pulses of carrier current are rectified to direct current impulses which operate the carrier receive relay to marking resulting in the application of marking signals from the tongue of this relay to the receiving telegraph apparatus.

When a spacing signal is applied at the sending end the carrier current in the channel concerned is suppressed and the carrier receive relay at the receiving end is held on the spacing contact under the control of its bias winding.

3.9 Voice frequency channels are, in general, designed for speeds of 50 bauds, and at this speed the distortion is small enough to allow channels to be used as links in a long telegraph circuit comprising two or three links, provided the other links are of equal quality. The systems employing 120 cycle spacing may be worked at a speed of 66 bauds and systems employing 240 cycle spacing may be worked at speeds up to 100 bauds.

/ With

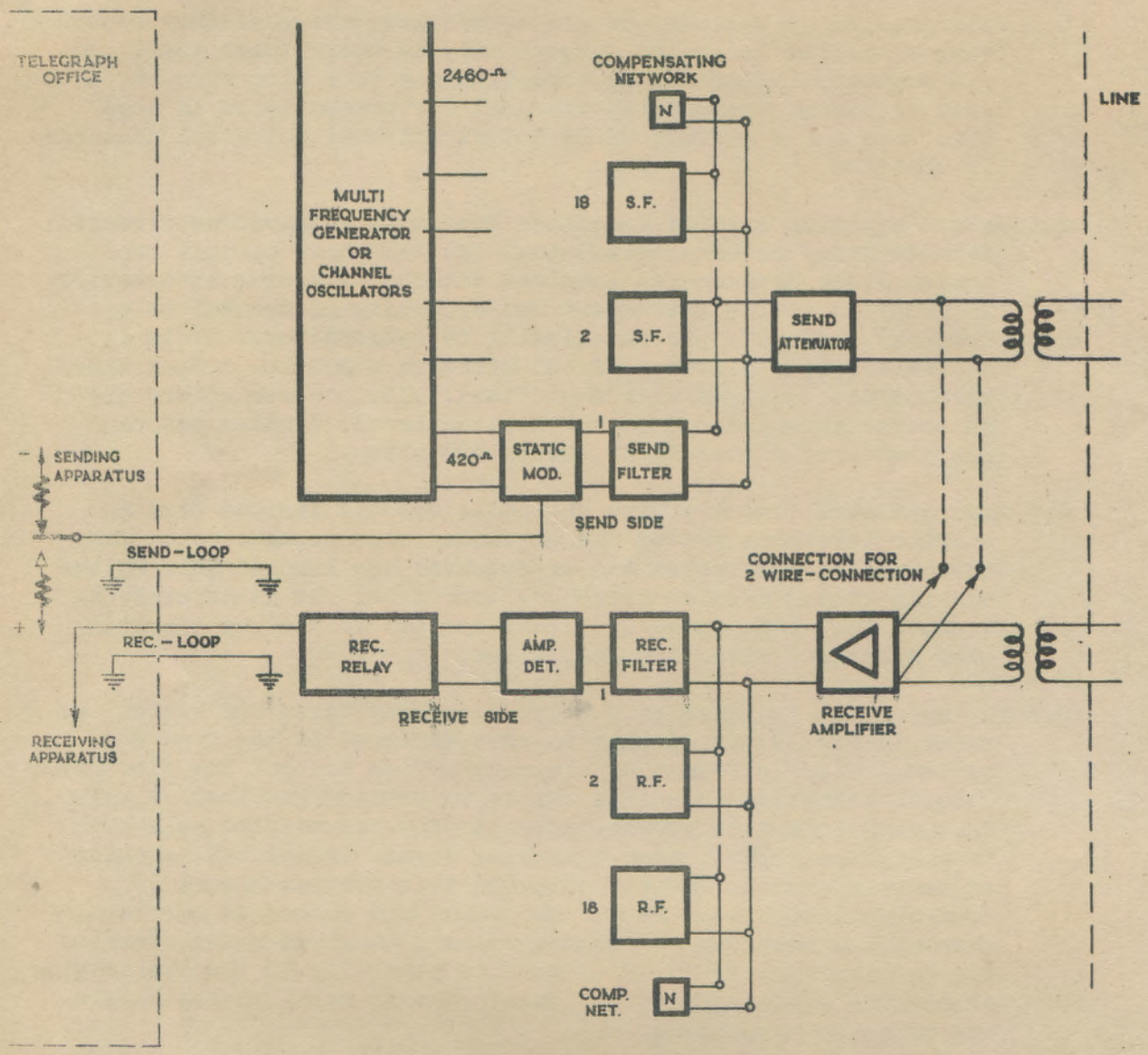

VOICE FREQUENCY TELEGRAPH SYSTEM.

FIG. 9.

With double arm Multiplex operation each channel in a 120 cycle spaced system gives an output of 90 words per minute or a total of 1620 words per minute for the 18 channels.

3.10 Circuit Operation of V.F. Carrier Telegraph System. Fig. 9 shows a simplified diagram of a Voice Frequency Telegraph System. It will be seen that associated with the sending channels is a group of send filters. The send filters are commoned on the line side and connected to line through a suitable transformer. The re-

/ ceive

ceive filters are similarly connected, a separate receiving line transformer being provided when 4 wire working is adopted.

The compensating network is particular to the installation and takes care of the irregularities caused by any missing filters and also improves the characteristics of the filters at the higher frequencies.

In each sending channel a voice frequency current is transmitted to line via a send filter circuit. At a suitable point between the generator and the filter the voice frequency supply is controlled by the contacts of a sending relay operating from a local telegraph loop or by means of a static modulator. Double current signals from the telegraph office operate the sending relay or the static modulator which in turn control the flow of voice frequency current in such a way as to produce impulses of this alternating current in a code corresponding to the transmitted telegraph intelligence. Incoming interrupted voice frequency current is directed into its own particular channel equipment via the receive filter and it is then amplified and detected. A carrier receive relay in the anode circuit of the detector valve is operated by the rectified carrier current and from its tongue delivers telegraph signals into the local receive telegraph loop.

Fig. 9 shows the arrangement for both two wire and four wire working. For four wire working the send and receive sides are separated, the send side being connected to the "transmit" circuit (usually a carrier modulator) and the receive side to the "receive" circuit (usually a carrier demodulator).

3.11 It may be seen that in view of the separate sending and receiving loops and the fact that a separate voice frequency band or channel is used in each direction, full duplex operation between two terminal telegraph operating rooms on any particular channel actually consists of two complete simplex channels, one operating in each direction, that is, duo directional simplex operation.

3.12 The V.F. Telegraph Detector and Automatic Volume Control. The detector used with the Voice Frequency System described includes an automatic volume control feature which ensures that stable telegraph signals are received, notwithstanding wide variations in line attenuation. The circuit, as shown in Fig. 10, consists mainly of a high gain amplifier valve and a detector valve, and is so arranged that by moving link switches the volume control feature can be cut in or out. On stable physical channels, such as cable circuits, where variations in attenuation are insufficient to require any special compensation the circuit is arranged to function as a straight amplifier and detector. For these conditions the links are set in position 2, and the detector valve obtains grid bias from a potentiometer bridged across the telegraph battery, whilst the amplifier valve bias is the negative potential drop across an 8 ohm filament resistance.

/ If

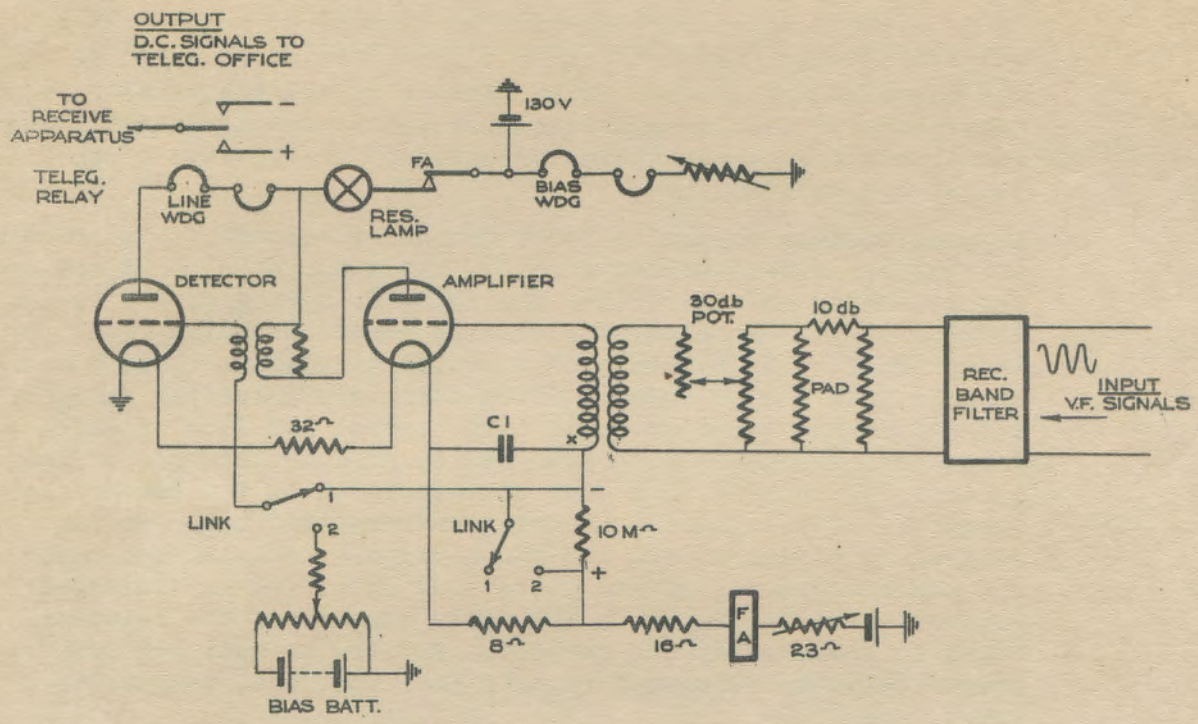

V.F. TELEGRAPH SYSTEM DETECTOR CIRCUIT
(With Automatic Volume Control)

FIG. 10.

If the links are in position 1, as shown in Fig. 10, the input level to the detector actually determines (subject to a small initial time element) the grid bias of the amplifier stage. In this position the bias for both valves is taken from the same point (x in figure), hence under static current conditions the normal bias on the detector will be approximately 12 volts with respect to the filament whilst that of the amplifier will be approximately 2 volts.

Between the common bias point and the filament circuit is a 10 megohm resistor which is bridged by the condenser C1. A normal signal amplified by the amplifier valve makes the grid of the detector valve slightly positive with the result that grid current flows in the detector valve via the 10 megohm resistor. The flow of current through this resistance increases the negative bias of the amplifier valve, and thus reduces its amplification. This negative bias will be reduced to a more normal value during an interruption to the incoming carrier provided that the interruption is of sufficient duration to allow condenser C1 to discharge through the 10 megohm resistance. The capacity of C1, however, and the 10 megohm resistance ensure that C1 will hold its charge for a time at least equal to the time length of the maximum telegraph spacing signal. The flow

/ of

of detector grid current through the 10 megohm resistance must also affect the grid bias voltage of the detector valve slightly, but the change from its normal value is not large enough to appreciably move its operating point, hence the effect on the signals delivered is negligible. If the attenuation of the line circuit decreases, i.e. the input level to the V.F. system becomes higher, the grid bias of the amplifier valve is further increased and the gain is reduced accordingly. On the other hand, if the attenuation of the circuit increases, the grid current through the 10 megohm resistance is reduced, the condenser C1 discharges slightly and the gain of the amplifier valve is increased. By this means a constant output is obtained from the detector valve over a wide working range. A three-position key (not shown in Fig. 10) also forms part of the detector circuit, this is used for testing and lining-up purposes when the automatic gain control device is employed (links in position 1). The input potentiometer has a range of 30 decibel.

A relay (FA) in the filament circuit serves the dual purposes of switching on the anode and telegraph relay bias potentials and providing a filament alarm. The telegraph relay bias winding is fed from the normal anode battery through a suitable resistance. The bias winding is necessary to restore the armature of the relay when rectified current is not flowing in the detector.

3.13 To ensure a signalling speed of at least 50 bauds, each channel has a nominal bandwidth of 120 cycles. Commencing with a lowest frequency of 420 cycles for Channel 1, the frequencies rise by 120 cycles per channel to 2460 cycles for Channel 18 as under:--

Channel	Frequency	Channel	Frequency	Channel	Frequency
1	420	7	1140	13	1860
2	540	8	1260	14	1980
3	660	9	1380	15	2100
4	780	10	1500	16	2220
5	900	11	1620	17	2340
6	1020	12	1740	18	2460

3.14 A number of voice frequency carrier telegraph systems of ultimate capacity of 9 channels have recently been added to the Departmental network. These systems have a spacing of 240 cycles per second between channels and the frequency allocation is as shown hereunder:--

/ Channel 1

Channel 1	Frequency 540
Channel 2	Frequency 780
Channel 3	Frequency 1020
Channel 4	Frequency 1260
Channel 5	Frequency 1500
Channel 6	Frequency 1740
Channel 7	Frequency 1980
Channel 8	Frequency 2220
Channel 9	Frequency 2460

These channels can be operated at speeds up to 100 bauds due to increased filter bandwidth as compared with the 18 channel 120 cycle spacing systems. They are utilized on routes where 9 channels are adequate for the telegraph traffic.

3.15 Generation of Voice Frequencies. At large offices where a number of Voice Frequency Carrier Telegraph Systems will eventually operate, the various frequencies are produced by a special multi-frequency generator which is mounted on one of the supply bays associated with the equipment. This unit takes the form of a direct current driven inductor alternator operating from the 24 volt supply, and having 18 sets of rotors and stators, one for each frequency. The alternator field exciting windings are all connected in series and are energised by direct current from the 24 volt battery. The speed of the machine is 3600 revolutions per minute governor controlled to within close limits of ± 0.1%, the governor contacts intermittently short-circuiting a series field resistance. Associated with the generator is a 1020 cycle fixed frequency oscillator which is used to check the generator speed and, consequently, the channel frequencies. The output of the oscillator is connected to a neon lamp mounted over a stroboscopic disc which is fitted to the end of the generator shaft. The number of black and white segments (34 each) is proportioned to the shaft speed (60 cycles per second) so that at the correct speed a black or white segment arrives at a fixed point 2040 times per second in synchronism with the flashes of the neon lamp. When this actually happens the disc appears to be stationary. If the speed is slightly out then the disc appears to be rotating - backward if the speed is slow and forward if the speed is fast. A further check of speed is obtained by patching the outputs of the generator and the 1020 cycles test oscillator together and listening for the beat note or, alternatively, patching both supplies into a detector and watching the beats on the rectified current meter.

The normal current drain taken by the multi-frequency generator from the 24 volts supply is 8 amps. The starting current is considerably higher, and at the moment of switching on a resistance is included in the armature circuit. This is short

/ circuited

circuited by a special relay when the motor gathers speed enough to develop a back e.m.f. of approximately 6 volts. Battery is fed to the motor through a 15 ampere fuse, whilst the field exciting current for the carrier alternators is fed through a 1.3 ampere fuse. A rheostat is included in the field circuit to control the exciting current and this, in turn, regulates the alternating current output voltages of the 18 alternator sections. Further individual adjustments are made by varying shunt resistances across the alternator outputs. The normal output voltage of each section is 1 $\pm$ 0.05 volt.

Multi-frequency generators, as described above, are designed for the larger offices. On smaller installations where development beyond one or two systems is not anticipated, the channel frequencies are produced by oscillators. The oscillators are set at the correct frequencies by reference to a standard oscillator and being designed for stability of output and frequency require very little further attention.

The oscillators are panel mounted, and the components, including the valves, are totally enclosed by the detachable metal cover. The rack space occupied is very small, a single oscillator being face mounted on a panel 19" × 3½".

Each oscillator employs a 1/4 ampere valve, Type 4020A, the filament of two valves (i.e. two oscillators) being wired in series. Filament current control is by ballast lamps.

3.16 Testing Apparatus. Voice Frequency Systems are supplied with the necessary meters for measuring currents in anode circuits and loops, the meters being connected to the required circuit by patching. In addition, a relay test table is supplied and sometimes a special distortion measuring set (described later) which uses as the indicating element a cathode ray tube. By observing the position of spots of light on the frosted surface of the tube, a definite measurement of the amount of distortion on any channel can be obtained visually.

3.17 Filters. The functions of the send filter associated with each channel of a V.F. system are firstly restriction of the frequency bandwidth transmitted to line for each channel. This restriction of bandwidth is necessary because the modulation of the carrier frequency of each channel with the applied D.C. telegraph signals in the static modulator results in the generation of a wide spectrum of side band frequencies on either side of the carrier. Suppression of the unwanted harmonics reduces the power to line and decreases the possibility of interchannel interference. The restricted bandwidth also prevents harmonics of the channel carrier frequencies from passing to line and perhaps causing interchannel interference in a similar manner. The send filters also serve to present a high reactive impedance to the carrier frequencies of other channels at the commoning point of the filters, thus ensuring that the carrier output of any one channel is not dissipated in,

/ or,

or modulated by, the sending equipment of other channels which are connected in parallel with it.

The function of the receive filters is to divide the multi frequency signals received over the line into the separate channel frequency bands and direct these to the appropriate amplifier detectors.

In the eighteen channel V.F. systems the send and receive filters are band pass filters having a bandwidth of 120 cycles per second symmetrical about the mid band frequency. In order to fulfil the functions outlined above a single section suffices for each send filter and two sections for each receive filter.

The filter design is of particular interest in that internal impedance transformations are necessary in order to permit the use of components which are commercially realisable at reasonable cost. The transmission requirements which have to be satisfied are as follows:--

(a) "The attenuation characteristic shall be approximately symmetrical about the mid band frequency."

(b) "The phase characteristic shall be approximately linear and of equal and opposite symmetry about the mid band frequency."

(c) "It is desirable that the attenuation of each receive filter ± 35 cycles per second from its mid band frequency should not be more than 2.5 decibel above the attenuation at the mid band frequency."

(d) "The attenuation of each receive filter ± 120 cycles per second from its mid band frequency (that is, at the mid band frequencies of the directly adjacent filters) should not be less than 30 decibel above the attenuation at the mid band frequency."

3.18 Compensating Network. The outputs of the send filters and the receive filters in an 18 channel system are connected in parallel and at the common point compensating networks are connected across each parallel group of filters. These networks provide a flanking impedance and serve to improve the characteristics of the higher frequency filters. Compensating networks are not usually equipped on 6, 9, or 12 channel systems.

/ 4.

4. COMPARISON OF V.F. AND TYPE B SYSTEMS.

4.1 The Voice Frequency system was developed after the Type B carrier and has largely eclipsed its predecessor. The V.F. system has the advantage that it does not occupy a "high frequency" line. It will be clear that if a "high pass" or carrier frequency circuit is available it can be more fully exploited by operating a 3 channel carrier telephone system over it, and using one of the three channels as a bearer channel for a Voice Frequency Telegraph system. The later type three channel carrier systems operating higher in the frequency spectrum can be operated over filters having a 5000 cycle cut-off, thus leaving the physical circuit free for an emergency broadcast channel if required. With the Type B carrier telegraph, however, 3000 cycles cut-off filters are necessary, limiting the physical circuit to the commercial speech band.

4.2 The Type B system would have an application on a route requiring additional telegraph circuits without any accompanying telephone development. The V.F. system would, of course, absorb the existing telephone line.

4.3 It may have been noted that both the Type B and the Voice Frequency Carrier Telegraph Systems employ the same general principle of operation, in that a fixed carrier is interrupted by a sending relay or static modulator and that a distant detector or rectifier delivers the translated carrier pulses to a receiving relay. As regards design and the actual components, however, considerable advances have been made in the Voice Frequency system. The main changes may be summarised as under:--

(a) Use of band filters instead of tuned circuits, giving better use of the available frequency range.

(b) Use of a form of automatic volume control in the detector circuit which maintains a steady level of incoming signals with consequent reduction in necessary observation and maintenance attention.

(c) Use of frequencies within the voice range instead of immediately above.

(d) Use at main offices of one multi-frequency generator to supply the carrier frequencies to all systems.

(e) Use of improved testing facilities. These, of course, are applicable to the type "B" also.

4.4 In addition to the above major alterations, the details regarding mounting and finish are varied in that the Voice Frequency system is mounted more compactly on double-sided racks, and

/ that

that it has an aluminium finish instead of black. Both systems use plug-in type carrier receive relays for rapid changing in case of fault. Both systems also require a relay adjusting table for relay maintenance.

4.5 The V.F. system adopts much closer spacing of the frequency bands and also uses much narrower bands than the type B system. This is due to the desire to obtain as many channels as possible in the available frequency spectrum consistent with satisfactory operation of teleprinter or teletype machine systems. By virtue of the wider effective frequency bands, the type B gives better telegraph speeds than the 18 channel V.F., which is unsuitable for multiplex or high speed Wheatstone traffic. The 18 channel V.F. system is satisfactory for teleprinter operation. Type B channels can be readily operated in tandem at high speed.

5. THE TYPE "R" CARRIER TELEGRAPH SYSTEM.

5.1 The Type "R" system is a 4 channel duplex carrier telegraph system operating in the frequency range 3300 to 5220 cycles per second. The system is designed to operate on a 2-wire circuit, but it may be readily applied to a 4-wire circuit if desired.

Eight different frequencies are employed, four in each direction, each frequency being an odd multiple of 60 cycles in the range 3300 to 5220 cycles per second. The carrier frequencies are spaced 240 cycles apart, with a separation of 480 cycles between the A and B terminal frequency groups.

The channel frequency allocations are as shown hereunder:--

Channel Number	"A" Terminal		"B" Terminal	
	Transmitting Frequency	Receiving Frequency	Transmitting Frequency	Receiving Frequency
1	4.50 kC/sec.	3.30 kC/sec.	3.30 kC/sec.	4.50 kC/sec.
2	4.74 "	3.54 "	3.54 "	4.74 "
3	4.98 "	3.78 "	3.78 "	4.98 "
4	5.22 "	4.02 "	4.02 "	5.22 "

It will be noted that the Type "R" system operates in the frequency spectrum above the normal voice frequency speech channel range and below the lowest carrier frequency transmitted by the Type CS; CT; SOS; SOT carrier telephone systems and it may, therefore, be operated on a pair of wires which already carry a normal voice frequency speech channel and one of the above-

/ mentioned

mentioned carrier telephone systems. It follows, of course, that the Type "R" system can be applied to a pair of wires not equipped with a carrier telephone system.

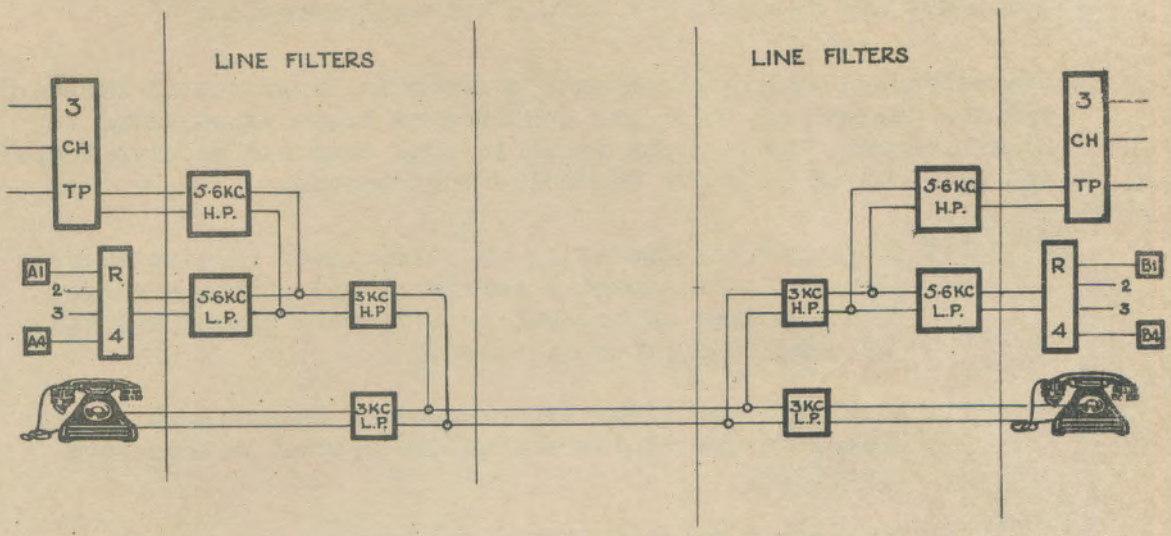

TYPE R (SUPER AUDIO) TELEGRAPH SYSTEM.

FIG. 11.

5.2 The system is principally intended for application to open wire lines where it is arranged to work between a 3 kC/sec. High Pass line filter and a 5.6 kC/sec. Low Pass line filter, as shown in Fig. 11. It must be ensured that the circuit employed for the Type "R" system can transmit the frequencies involved (3.30-5.22 kC/sec.) without too high an attenuation. A line equivalent exceeding 15 decibel at 5 kC/sec. is not recommended. This is equivalent to a distance of 175 miles on a 200 lb. copper circuit.

The Type "R" system can, of course, be operated over a lightly loaded cable circuit having a cut off frequency of not less than 5400 cycles per second and an attenuation not exceeding 15 decibel.

It should be noted that the application of the Type "R" system to a circuit precludes the simultaneous operation of a physical broadcast circuit employing a wide transmission band.

5.3 Intermediate repeaters for the Type "R" system have not yet been designed and its operation is, therefore, normally limited to the range stated above. A block schematic showing the arrangements for derivation of a Type "R" system is shown in Fig. 11.

/ 6.

6. SEND AND RECEIVE TELEGRAPH LOOPS.

6.1 The send and receive circuits of the carrier telegraph terminal equipment are designed for double current operation.

The telegraph loop arrangements conform to Departmental standards, and the current in both send and receive loops is adjusted to 25 milliamps. The current value in both send and receive loops was fixed at 25 mA's for the following reasons.

(i) To permit the operation of teleprinter receive magnets direct in the receive carrier loop. (This arrangement is used at present to a limited extent and its use may be further extended.)

(ii) Difficulty would be experienced in detecting bias with lower values of current unless special meters were provided.

(iii) In systems where a 215A relay is used as a sending relay 25 mA's is required for its satisfactory operation. (Usually a static modulator circuit, consisting of a rectifier network, is provided in place of a sending relay.)

(iv) A current of 25 mA's provides ample margin for the adjustment of current required for various types of static modulators.

6.2 The current limiting resistors are located so that the aforementioned current requirements will be met in either of the following conditions.

(1) Direct working between the carrier terminal and the telegraph office.

(2) Through working, that is with channels patched from the receive loop of one system to the send loop of another system when such patching is performed at either the carrier terminal or the telegraph office.

The limiting resistor in the send telegraph loop is usually located in the static modulator panel in the carrier telegraph terminal. The limiting resistor in the receive telegraph loop is located at the telegraph office and the value chosen depends on the telegraph apparatus in use.

/ 7.

7. STATIC MODULATORS.

7.1 The use of a non-linear conductor (e.g. metal rectifiers) as a variable impedance under the control of the polarity of the applied voltage has been extensively employed in recent years for many telecommunication circuit purposes, and one of the main applications has resulted in the replacement of telegraph sending relays by static modulators. The static modulator was first introduced with V.F. carrier telegraph systems and its advantages over the sending relay were so marked that steps were taken during 1938 to replace all 215A type sending relays in Type B systems with static modulator circuits.

7.2 Figs. 12 and 13 show two types of static modulator circuit used in carrier telegraph working. The static modulator unit shown in Fig. 12 consists of an input transformer, modulator unit comprising copper oxide rectifier units MR1-4, resistors R1, 2, and an output transformer. Resistor R4 is the current limiting resistor in the send telegraph loop and its value is chosen to limit the current in the loop to the standard value of 25 milliamps. The shunt resistor R3 ensures that the current applied to the rectifier network is limited to the correct value.

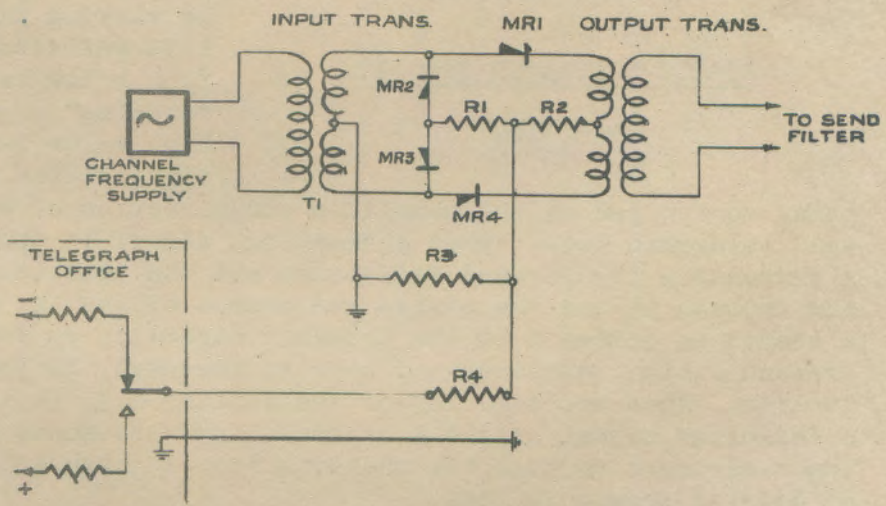

STATIC MODULATOR.

FIG. 12.

When the transmitting telegraph apparatus at the telegraph office is in the "marking" condition negative potential is applied to the static modulator and rectifiers MR1 and MR4 become conducting. At the same time rectifiers MR2 and MR3 become non-conducting and thus offer a high impedance shunt across the secondary winding of the input transformer. Thus, carrier frequency from the oscillator is permitted to pass freely to the send filter unit, the attenuation in the static modulator being that due to the transformers alone.

/ When

When the potential applied to the static modulator is reversed due to the application of a "spacing" signal, the rectifier impedances are reversed, (i.e. MR2 and MR3 become conducting and MR1 and MR4 non-conducting), resulting in a low resistance shunt across the secondary of the input transformer, together with a high resistance series path to the passage of carrier frequency from the channel oscillator.

7.3 The two bridges A and B, in the circuit shown in Fig. 13, are identical and are made up of copper oxide metal rectifier elements. The transformer has a 10 : 1 ratio step up and the primary is connected across the output of the channel frequency source whilst bridge B is connected across the secondary. The impedance of bridge B, between the points P Q, is therefore effectively in shunt across the carrier frequency source and modulation is effected by varying the value of this reflected impedance from a low value during "spacing" signals to a high value during "marking" signals, the variation being controlled by the magnitude and direction of current in the send telegraph loop. When a "marking" signal is applied bridge A presents a low forward resistance and the send loop current flowing through it and the series resistance biases the rectifier elements in bridge B in the backward direction so that they present a high impedance and carrier frequency is transmitted to line. When the polarity of the applied D.C. is reversed on a "spacing" signal bridge A becomes high resistance and bridge B low resistance so that the shunting loss is high and practically no carrier passes to line.

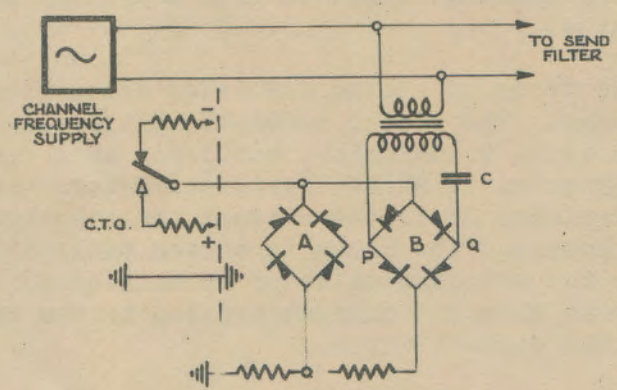

STATIC MODULATOR CIRCUIT.

FIG. 13.

Typical values of the A.C. impedance across points P and Q are 300,000 ohms and 100 ohms during "marking" and "spacing" elements respectively, the corresponding reflected impedances through the transformer being 3,000 ohms and 1 ohm.

Bridge A and its series resistance serve to produce the correct value of negative bias across bridge B in the "marking" condition and tend to equalise the D.C. loop current in the marking and spacing intervals. The condenser C prevents the flow of D.C. through the secondary winding of the transformer.

/ 7.4

7.4 A static modulator may, therefore, be said to modulate the carrier frequency of the channel with which it is associated in accordance with the polarity of the telegraph signals applied from the telegraph office resulting in pulses of carrier to line corresponding to a "marking" signal and cessation of carrier during a "spacing" signal.

The static modulator may also be regarded as an attenuator switching device such that with an applied D.C. polarity of negative potential the attenuation offered to the A.C. channel frequency is of the order of 4 decibel, whereas upon reversal of the D.C. polarity to a positive potential the attenuation increases to 40 decibel. In other words the "discrimination" of the static modulator is, on the above quoted values, 36 decibel. Thus, whilst in the blocking condition carrier is still passed to line, the level is so low that it is below the threshold of operation of the receiving equipment. In early static modulators "discrimination" values of the order of 30 decibel were obtained but in circuits employed in the last two or three years the "discrimination" has been increased to values of 40 and 50 decibel due mainly to steeper voltage-resistance characteristics of the rectifier elements employed.

The elimination of apparatus which contains moving parts and requires regular maintenance attention to ensure operation free from contact and bias troubles is attractive and the discrimination of the latest static modulator circuits is such as to definitely establish their superiority over mechanical send relays.

It is interesting to note that, whilst various static modulator circuits have been tried in American practice, their use has not been extended because they imposed certain operating limitations on the associated telegraph apparatus in use. Such limitations have not been experienced with the telegraph apparatus and arrangements in use in Australian practice.

8. TELEGRAPH DISTORTION MEASURING EQUIPMENT.

8.1 The modern method of measuring and checking the day to day performance of carrier telegraph circuits is the observation of the time distortion suffered by certain specific test signals transmitted over the channel. The use of special distortion measuring equipment permits of an exactness in the setting-up and maintenance of channels which was impossible with the older methods which employed the telegraph apparatus itself to check the performance of the carrier telegraph channels.

8.2 Stroboscopic distortion measuring sets have been found to be the most convenient type for measuring distortion. In this type of set the timing of the received signals is measured by means of

/ radial

radial flashes displayed on a circular time base, the flashes being arranged to occur at the instants of modulation, that is, when the receive relay armature moves across to the opposite side. The period of the time base is so arranged that the radial flashes are superposed when the signals are distortionless. When distortion is present the flashes spread over an arc, the extent of which gives a measure of the distortion present. A schematic diagram of a typical telegraph distortion measuring set used for distortion measurements on carrier telegraph systems is shown in Fig. 14. This set, in addition to measuring distortion, provides a series of distortionless test signals of sufficient variety to be representative of actual working conditions.

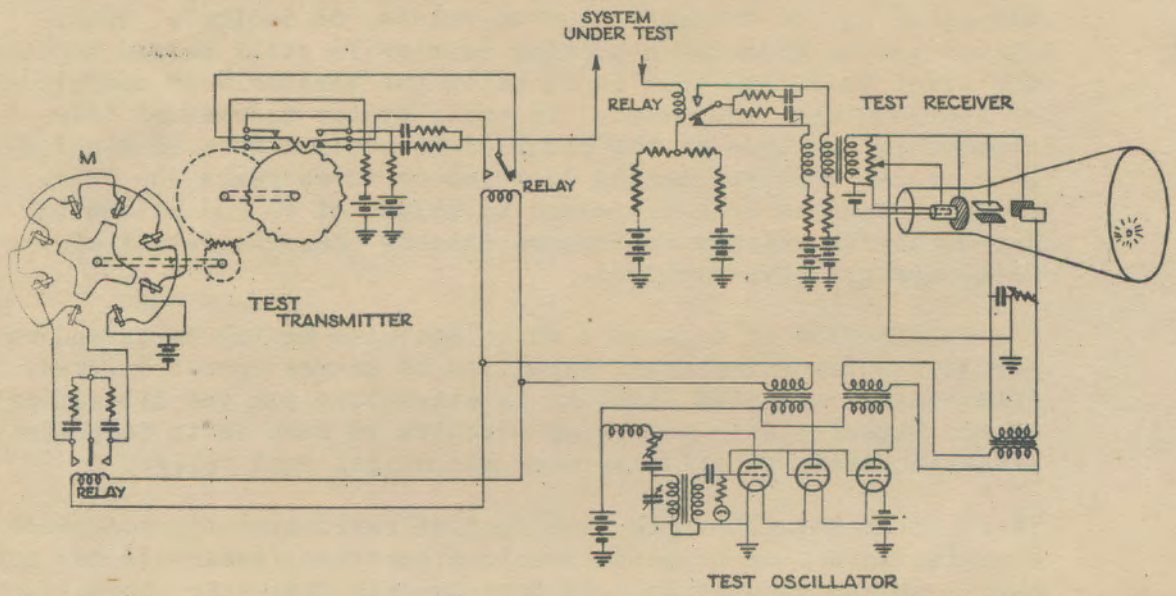

TELEGRAPH DISTORTION MEASURING SET.

FIG. 14.

8.3 The stroboscope is a cathode ray tube on the screen of which bright radial flashes denote the operations of the receiving relay. The circular time base is produced by means of the oscillator and a phase splitting resistance and condenser. The frequency of the rotating field is normally made equal to the signalling speed in bauds so that one complete revolution represents one time unit. Thus the flashes produced by an undistorted train of signals will all appear in the same position whilst distorted signals will produce flashes distributed over a section of the scale. A transparent scale of 100 divisions is mounted above the cathode ray tube so that a direct reading of percentage distortion can be made.

8.4 A valve oscillator associated with a special transmitter enables tests to be made over a wide range of telegraph speeds (usually 30-120 bauds) and facilitates adjustment of speed when the

/ apparatus

apparatus is receiving from a distant distortion test set.

8.5 The transmitter consists of two relays operated in parallel from the oscillator whose frequency in cycles per second is adjusted to the desired telegraph speed in bauds. One of the relays serves to drive the synchronous motor M. The motor controls the revolution of a series of cams cut to produce the following ratios of mark to space - 1/1; 2/2; 5/1; and "PARIS" (in Morse). A key provides for reversal of the 5/1 and PARIS signals so that six different test signals can be obtained from the test transmitter. The production of distortionless signals is achieved by the employment of two sets of springs bearing on each cam with an angular separation corresponding to half a time unit. This results in the production of two double current signals from each cam which are identical but one signal is half a time unit behind the other signal. The second relay, termed the "cleaning up" relay, connects the output to the mid portion of every time unit of the first train of signals and to the mid portion of every time unit of the second train of signals at the frequency of the oscillator. The output therefore consists of a signal each time unit of which consists of a period of marking or spacing current derived from the first set of springs during the period corresponding to contact between the cleaning up relay tongue and one contact, together with a similar period of the same polarity derived from the second set of springs whilst the relay tongue rests against the other contact. This process is repeated for the reversed polarity from the cam springs so that four periods make up one cycle of the controlling frequency, which is perfectly distortionless and independent of imperfection in the cams or critical adjustment of the cleaning up relay.

8.6 The distortion measuring equipment is either mounted as an integral part of a carrier telegraph system or alternatively is available in a portable form consisting of three units comprising test oscillator, test transmitter and receiver.

8.7 Another fixed type of telegraph distortion measuring set of similar general principles employs normal telephone relay combinations for generating the distortionless signals.

8.8 The independent and reliable nature of the tests obtained from telegraph distortion measuring sets is of great value in both the installation and the efficient maintenance of a carrier telegraph network, and the measurement of channel distortion and machine margins is rapidly becoming a matter of routine. The clearer insight which experience and modern testing equipment have given into the possibilities and limitations of carrier telegraph systems with respect to permissible distortions and causes of such distortions represents one of the chief advances in the art in recent years.

/ 9.

9. TEST QUESTIONS.

1. Describe briefly the Voice Frequency carrier telegraph system making use of simplified schematic diagrams.

2. Describe briefly the Type B carrier telegraph system, making use of simplified schematic diagrams.

3. Compare the Voice Frequency and type B carrier telegraph systems, stating the main technical differences and the advantages and disadvantages of each. Could either system be improved by an interchange of component features? If so, give an explanation.

4. Describe briefly the method of controlling the received current level on a Voice Frequency carrier telegraph system. What is the advantage of this arrangement, and what precautions must be taken to ensure that it functions correctly?

5. Assuming that it is proposed to operate a Voice Frequency carrier telegraph system between two capital cities, and that there are both carrier and physical circuits available, which type of channel would be selected, and why?

6. Where would the use of oscillators be desirable in preference to a multi-frequency generator to supply carrier frequencies to a carrier telegraph system? What is the advantage in making all frequencies of a carrier telegraph system multiples of a fundamental frequency?

7. Why are standard send and receive telegraph loops desirable?

END OF PAPER.

Notes

INDEX.

	Paper No.	Page No.
Alternative Terms	1	2
Amplifiers		
For Carrier Systems	7	32
Modulator SA and SB System	8	18
Negative Feed Back	7	33
Programme Line	10	7
Thermionic Valve	2	1
Transmitting F and FA System	8	9
Amplification Factor	1	10
Anode or A.C. Resistance	1	14
Attenuator, Metal Rectifier	3	10
Automatic Gain Regulation Type J	12	11
Automatic Volume Control	13	7
Balance Network	5	11
Ballast Lamps	1	23
Blue Haze	5	13
Carrier Systems		
Balanced Working	7	14
Demodulation	7	12
Equalisation	7	37
Four Wire Working	7	14
Fundamentals of	7	2
Grouped Working	7	13
Generation of Frequencies	7	29
Multi Channel	7	15
Oscillators	7	31
Pilot Equipment	7	40
Power Supply	8	16
Reason for Development	7	1
Repeaters	7	41
Requirements for Practical Use	7	5
Sideband Transmission	7	11
Signalling	7	40
Sydney-Maitland	12	23
Telegraph	13	2
Carrier Systems, Types in Use		
B Telegraph (10 duo directional Channels)	(7	43
	(13	4
B Telephone (Three Channel)	(7	43
	(9	1
C Telephone (Three Channel)	(7	44
	(9	8
CF Telephone (Single Channel)	7	43
CF1 Telephone (Single Channel)	8	2
D and DA Telephone (Single Channel)	(7	43
	(8	4
F and FA Telephone (Single Channel)	(7	43
	(8	6
Programme Transmission	11	1

/ SA

LONG LINE EQUIPMENT.

	Paper No.	Page No.
Carrier Systems, Types in Use (Contd.)		
SA and SB Telephone (Single Channel)	(7	43
	(8	15
SOA and SOB Telephone (Single Channel)	(7	43
	(8	25
SOS and SOT Telephone (Three Channel)	7	44
SS and ST Telephone (Three Channel)	7	44
T Telephone (Three Channel)	(7	44
	(9	11
Type J	12	2
Type K	12	18
Wide Band	12	1
Converters, Metal Rectifier	3	5
Copper Oxide Rectifiers	3	1
Crystal Filter	4	11
Demodulation		
Metal Rectifier	7	20
Thermionic Valve	2	9
Type J	12	8
Demodulators		
SA and SB System	8	19
Type B Telephone	9	5
Detector, V.F. Telegraph	13	17
Diode Valves	1	4
Distortion Measuring Equipment	13	29
Electron Theory	1	3
Equalisation	7	37
Filters		
Band	(4	11
	(7	10
Band Elimination	4	2,3
Band Pass	4	2,3
Band, V.F. Telegraph	13	21
Constant K, Band Elimination	4	6
Constant K, Band Pass	4	5
Constant K, High Pass	4	5
Constant K, Low Pass	4	4
Crystal	4	11-13
Directional	4	11
General Theory	4	4
High Pass	4	2,3
Line	7	9
Line Set	4	9
Low Pass	4	2
Telegraph Composite Set	4	10
V.F. Repeater Low Pass	4	11
V.F. Telegraph	13	11
Gain Control	5	11
Grid Bias	1	13
Hybrid Coils	5	4

/ Indirectly

	Paper No.	Page No.
Indirectly Heated Valves	1	13
Metal Rectifiers	3	1
Modem	12	9
Modulation		
Balanced	7	20
Grid	7	18,19
Metal Rectifier	(3	10
	(7	20
Methods of	7	18
Thermionic Valve	2	8
Type J	12	8
Modulator		
Oscillator	8	11
Static	3	10
Type B System	9	3
Monitoring Circuit	8	28
Mutual Conductance	1	15
Oscillators		
Carrier Frequency	7	31
Carrier Telegraph	2	4
Carrier Telephone	2	5
Modulator F and FA System	8	11
Modulator S and SB System	8	20
Modulator SOA and SOB System	8	31
Thermionic Valve	2	3
Type B System	9	2
Pentode Valves	1	11
Power Supply, Type SA and SB System	8	15
Power Supply, Type T Carrier	9	12
Programme Branching	10	8
Programme Transmission	10	1
Programme Transmission Apparatus	10	9
Rectifiers		
Full Wave	2	7
Half Wave	2	7
Metal	3	1
Thermionic Valve	2	5
Repeaters		
Advantages of	5	4
Carrier	7	41
Cord Circuit	5	9
F and FA Systems	8	14
Four Wire	5	10
Gain Control	5	11
Maintenance of	5	14
Pentode	5	10
Programme Carrier	11	6
Type 21	5	4
Type 22	5	8
Type B Carrier Telegraph	13	9

/ Type K

LONG LINE EQUIPMENT.

	Paper No.	Page No.
Repeaters (Contd.)		
Type K	12	22
Voice Frequency	5	1
Screen Grid Valves	1	10
Selenium Rectifiers	3	5
Send and Receive Telegraph Loops	13	26
Sidebands	7	5-7
Signalling		
16 Cycle	5	12
135 Cycle	5	12
1000 Cycle	(5	12
	(6	1-8
Facilities over Repeater Lines	5	12
Voice Frequency	5	12
Space Charge	(1	6
	(13	27
Static Modulator (or Relay)	3	12
Suppressor Grid	1	11
Sydney-Maitland Carrier System	12	23
Telegraph Distortion Measuring Equipment	13	29
Telegraph System		
Type B Carrier	13	4
Voice Frequency	13	11
Type R (Super Audio)	13	24
Terminating Unit, Four Wire	8	26
Tetrode Valves	1	10
Thermionic Emission	1	2
Transmission Measuring Set		
SA and SB System	8	23
SOA and SOB	8	34
Transmission Standards	5	1
Triode Valves	1	8
Triode Valves, Characteristic Curves	1	9
Valves		
Five Electrode	1	11
Four Electrode	1	10
Indirectly Heated	1	8,13
Output Impedance of	2	11
Selection of	2	10
Three Electrode	1	8
Troubles in	5	12
Two Electrode	1	4
Valves, Types Used in Telephone Plant	1	16-22
Voice Frequency Repeaters	5	1
Voice Frequency Telegraph System	13	11
Voltage Doubler Circuit	3	9
Voltage Limiters	7	28
Voltage Regulation	9	16
Voltage Regulator	8	13